Engineering Library
JUN 26 1916
UNIV. OF ILL. LIBRARY

Telephony.

THE AMERICAN TELEPHONE JOURNAL

PUBLISHED EVERY SATURDAY.
TELEPHONY PUBLISHING COMPANY.
VOLUME 70, NO. 26.

CHICAGO, JUNE 24, 1916.

SINGLE COPIES, 10 CENTS
YEARLY, U. S. A., $3; CANADA, $4;
ALL OTHER COUNTRIES, $5

H. G. WEBSTER
CONSULTING ENGINEER
MONADNOCK BLOCK
CHICAGO

Telephone Engineering.
Automobile Accessories.
Electric Signaling.
Patent Investigations.
Expert Testimony.

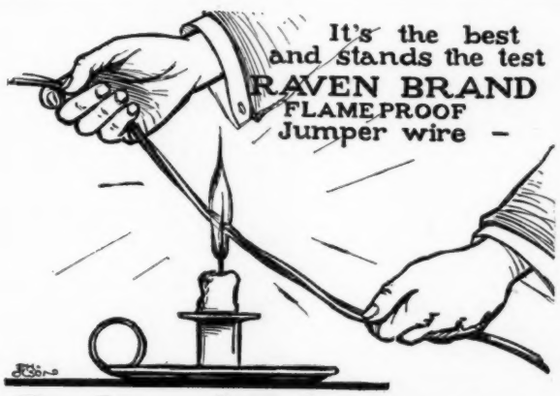

American Steel & Wire Co.'s
W. & M.
TELEPHONE WIRE
AMERICAN STEEL & WIRE CO.
Chicago New York Cleveland
Worcester Pittsburgh Denver

EVERSTICK ANCHORS
You will go around in a circle, if you are looking for a better anchor than the EVERSTICK—there's a reason.
Write for Literature.
Everstick Anchor Co.
St. Louis, Mo.

Order it from our Nearest Branch

Automatic Electric Co.
Chicago, Ill., U. S. A.
Makers of 600,000 Automatic Telephones
We Have Branches in
New York—46 W. Broadway.
Buffalo—332 Ellicott St. Toledo—Second Nat. Bank Bldg.
Boston, Mass.—Tremont Bldg. Pittsburgh—First Nat. Bk. Bldg.
Detroit, Mich.—Ford Bldg. Philadelphia, Pa.—Bourse Bldg.
St. Louis, Mo.—Syndicate Trust Bldg.

CEDAR POLES
Wire or write for delivered prices
NATIONAL POLE CO.
ESCANABA :: :: MICH.

Chapman Lightning Arresters

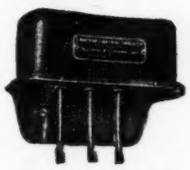

drain a line of lightning and static charges as naturally as a sewer system drains a street of water.

Manufactured by
MINNESOTA ELECTRIC CO.
MINNEAPOLIS, MINN.

"Rubber Covered Wire and Cables"

"The Standard for Telephone Service"

IF IT'S **PARANITE** IT'S RIGHT

Substation Wire; Pothead Wire; Distributing Wire; Bridle Wire; Flameproof Wire and Iron Core Drop Wire; Rubber Covered Braided Cables, Lead Encased and Armored Cables.

Factory and General Offices
INDIANA RUBBER and INSULATED WIRE COMPANY, JONESBORO, IND.
Chicago Office—210 Desplaines Street

FORT WAYNE PRINTING COMPANY
FORT WAYNE, IND.
Printers and Blank Book Manufacturers
Write for Samples and Prices on I. C. C. Forms
Ours Are the Best

Telephone Cables
ALL SIZES AND CAPACITIES
Hard Drawn Copper Telephone Wire.
Galvanized Iron Telephone Wire.
Siemens-Martin and High Strength Strands.
AMERICAN ELECTRICAL WORKS
PHILLIPSDALE, R. I.
CHICAGO—112 W Adams St.
CINCINNATI—Traction Bldg.
NEW YORK—165 Broadway

THE LAST WORD ON SOLDERING

All the kinks we have printed in the different issues of this Big Sheet have been published in a book 5 x 8 inches.

This is very convenient for ready reference—especially valuable for beginners—as it also has a very comprehensive introductory article on Soldering.

ANY INTELLIGENT BOY CAN LEARN TO SOLDER BY READING THE INSTRUCTIONS IN SOLDERING KINKS AND FOLLOWING THEM

Sent Post Paid Anywhere in the U.S.A. 25 cents

Special Prices for Quantities. A Valuable Text Book for Technical Schools

The M. W. Dunton Co.
Providence, R. I., U. S. A.

Ring Your Telephones From Your Lighting Circuit

Connect Your Lighting Circuit Here

50c to $1.00 per month Total Operating Cost

No Dry Batteries

No Wet Batteries

For Power Ringing in Your Exchange

Operates Off A.C. or D.C. Current Lighting Circuit

Connect Your Ringing Leads Here

Our standard ringing machine of this type, for straight line ringing, is the CODE NO. 7-A Frequency Converter. Operates off 110 volt 60 cycle A. C. circuit. Can also be provided with positive and negative pulsating attachment for selective ringing.

We make ringing converters which will operate off any lighting circuit.

Give us the voltage and frequency of your lighting system and we will advise the machine to use and saving which it will effect for you.

Converters Shipped on 30 Days' Approval

Cracraft, Leich Electric Co.

Genoa, Ill. **Kansas City, Mo.**

Patents pending on all types of Leich Frequency Converters.

ARGUS LIGHTNING ARRESTER

Before

Lightning takes its toll, install

Argus Arresters

and you will be glad

After

the storm.

"Quicker Than Lightning"

Foote, Pierson & Company

160-162 Duane St.

New York City

You Don't Have to Shout

over the

PEERLESS

and you can hear a whisper also

Equipped with a Loud-speaking Receiver

Most Powerful Generator

Write today for Cat. 31 and price list

Swedish - American Telephone Mfg. Co.

5237 Ravenswood Avenue

CHICAGO

Telephony.

THE AMERICAN TELEPHONE JOURNAL

Comprising Telephony, American Telephone Journal, Telephone Weekly, Telephone Magazine, Telephone Securities, The Telephone, Sound Waves

PUBLISHED WEEKLY BY THE TELEPHONY PUBLISHING COMPANY
MONADNOCK BLOCK, CHICAGO

H. B. McMEAL, PRESIDENT AND EDITOR. H. D. FARGO, SECRETARY AND TREASURER. J. C. KELSEY, VICE-PRESIDENT AND FINANCIAL EDITOR.
S. R. EDWARDS, MANAGING EDITOR. J. R. HASTIE, VICE-PRESIDENT AND ADVERTISING MANAGER. W. E. RAYMOND, SUBSCRIPTION MANAGER.

Entered as second-class matter September 4, 1908, at the post office at Chicago, Ill., under act of March 3, 1897

Volume 70
Number 26

CHICAGO, SATURDAY, JUNE 24, 1916

Subscription—10 Cents a Copy
$3 a Year U. S., Cuba and Mexico
$4 Canada; $5 Other Countries

Bill the Troubleman says:

"What? Has the Bell-Western Electric combine withdrawn from the Independent field? Well, all I've got to say is, that a green goods man is pretty apt to drop his bundle of 'queer' when a policeman is only two feet behind him."

The Bell's Latest Move.

The announcement that the Western Electric Co. has decided to withdraw from the Independent telephone field is certainly good news to the Independents—manufacturers and operators alike. No matter what the motive of the Bell factory may be, nor what forced it to such action, the result is bound to be beneficial to the industry. The spectacle of the Bell-Western Electric combine gobbling all the Bell business as a special privilege, and then invading the Independent field to sneak, by fair or foul means, that competitive trade, and monopolize everything—that spectacle, we say, has long aroused the disgust and wrath of every honest man who believes in fair play.

This feeling of protest has been rapidly taking tangible form during the last three months. Complaints have been filed with the Federal Trade Commission by business concerns in various states, and a bill has been introduced in the United States Senate to prohibit common carriers—the American Telephone & Telegraph Co.—from engaging in a merchandizing business. Besides the Interstate Commerce Commission has notified common carriers that it is preparing to enforce the Clayton anti-trust law, section 10 of which turns a stern and accusing eye on the present Bell-Western Electric alliance. In view of these developments, therefore, it is not suprising that the Bell factory calls a halt and backs out of what apparently was becoming an unpleasantly warm situation.

Of course, the Bell officials have an explanation ready for this change of policy. They say the Western Electric Co. is so busy supplying Bell equipment that it cannot handle Independent orders; that labor conditions and the difficulty of obtaining raw materials make it impossible to take care of outside business. That is the best "get away" they can invent under the circumstances, but it doesn't fool anybody. The cold fact is the Bell managers were fearful they would be compelled by legal authorities to clean house and stop their unfair competition. They made a virtue of a necessity and pulled out before they were thrown out. Like Davy Crockett's coon, they decided to "come down" when they saw the rifle aimed at them and not wait until the trigger fell.

Many interesting thoughts are suggested by this surrender of the Bell organization. One is that it shows the folly of Independent operating companies buying from the Bell factory. According to their own statement, as soon as they have a rush of Bell business, they are willing to throw overboard their Independent customers and let their interests slide. The Western Electric was willing to go the limit to lure an Independent company away from an Independent manufacturer, to injure the latter and strike a blow at competition, but at no time was the Bell factory really interested in helping an Independent customer. Had the storm of public disapproval not loomed close above the Bell combine, of course, the Bell factory would have continued to seek Independent business. Now, for policy's sake, it ceases soliciting Independent orders so that when called to account by the government, it can enter a plea of "not guilty."

It must have been a bitter pill for the Bell managers to order a retreat from the Independent preserves. President Vail has believed that the Bell was entitled to a monopoly of both the operating and manufacturing branches of the telephone business. That is why the Bell factory made such an aggressive campaign for Independent business. It was considered a two-edged weapon that would break down Independent manufacturers and also lure Independent operating companies into the Bell fold—in short, materially help to destroy competition.

Does the Bell hope to keep what it has by voluntarily—with the sword of the law at its throat—abandoning its unfair efforts in the Independent field? In other words, does it hope to be permitted to continue its alliance with the Western Electric Co. by not selling to outsiders? By giving up a portion

of the loaf, does it hope to keep the rich, juicy cake of non-competitive Bell business with its 4½ per cent. rake-off as frosting?

As a plain business proposition, the Bell should now make a complete job of reformation and buy in the open market. It should "come clean." Let it stand out in the open and transact its buying like other common carriers—on a competitive basis—and it will enjoy a clearer conscience. It will not have to dodge down legal alleys and spend time and money trying to hoodwink public officials. These tactics succeed for awhile but they only defer the day of reckoning, and the eventual payment is always heavier than if a fair, square course had been pursued from the beginning.

The Bell managers have known all along that the activity of the Western Electric Co. in the Independent field, under the circumstances, was wrong, and they have done right in ordering the poaching stopped. They also know that as a common carrier the Bell organization should buy in the competitive market. They should "come clean," and obey the spirit of the law which recognizes competition.

Independent telephone interests meanwhile must keep a vigilant eye on the situation. They are dealing with a tricky adversary. When the Bell shows signs making concessions, that is the time to search for black inhabitants in the woodpile. We desire no more Kingsbury commitments. If the Bell factory means to quit poaching, that much is gained, but exact justice demands more. If the Bell claims the privileges of a common carrier, it should buy in a competitive market. If it is on the square with the law and the people, that is what it will plan to do—and do it.

For longer than 15 years TELEPHONY has opposed the Bell's claims to a telephone monopoly. It is, therefore, with a feeling of pardonable gratification that it notes this retreat of the Bell factory from the Independent field—always providing, of course, that the surrender is on the square. This publication has fought for an open field and the right of Independent telephony to fulfill its mission. Approximately eleven million telephones are in service in this country today because of the energy and enterprise of the Independents who successfully battled against Bell monopoly and labored to bring the telephone to its widest usefulness.

TELEPHONY therefore congratulates the Independent industry again at this time, and urges every man in the rank and file to keep up the good work and stand for his rights.

The Bell Picayune Tactics.

There is no lack of evidence that Bell operating companies leave no stone unturned to swell the sales of the Western Electric Co.

If by hook or crook a Bell licensee can throw any cloud on the merit of Independent-made telephone apparatus there is, as the author of "Casey at the Bat" would say, great joy in Mudville.

If the vast organization of the Bell interests can divert an order for a dozen telephones from an Independent manufacturer in favor of the Bell factory, there is more jubilation than if President Vail had been able to hold a long distance conversation with the planet Mars. For instance, recently an Independent manufacturer sold a number of telephones to a farmers' company in Nebraska which operates all the rural lines around a certain town and which connects with the Bell exchange at the city limits. The Western Electric Co. had been after this business hard but, not even with the assistance of the local Bell operating organization, could it land the order.

There was much sadness among both the Bell operating and the factory forces, and there was considerable talk of reprisal. After the Independent telephones had been in service for a few months, the Bell operating company began to complain to the farmers' company about the clearing-out signals and the calls received on the Bell switchboard. The Bell men insisted that there was something wrong with the instruments or with the lines, and threatened to discontinue the connection. The farmers were very much disturbed and finally appealed for help to the Independent manufacturer who had furnished the equipment.

It did not take this Independent manufacturer long to detect the African in the woodpile. A salesman was sent to the scene of trouble with a little demonstrating switchboard, a strip of drops and a cord circuit. He took some of the farm lines at the city limits, connected them to his little board, and soon proved to the farmer company that the trouble was not on its lines nor with its telephones.

It cost this manufacturer something to make this demonstration, but fortunately he was able to convince his rural customers that they had made no mistake in buying Independent apparatus. In this instance, the Independent manufacturer was advised of the situation and could defend his product. No doubt there are many cases in which the Bell poisons the minds of telephone buyers against Independent equipment in which the manufacturers have no chance to protect themselves.

Last month a telephone company in North Dakota reported to the Independent manufacturer who had made its switchboard, that this equipment had been condemned by the Bell licensee company with which it had toll connections. The Bell company urged the connecting company to discard the Independent board and buy one from the Western Electric Co. The Independent company was opposed to this course of action because it believed the board had not outlived its usefulness, and, anyway, it did not wish to buy from the Bell factory.

The result was that an inspection of the switchboard showed it could be repaired, enlarged and utilized for sometime to come. Of course, this was not at all pleasing to the Bell missionaries, and the chances are they will soon resume their campaign of harassing this connecting company to the end that one more sale is eventually made by the Bell factory, unless the old regime has passed.

It is picayune tactics like these that have aroused the disgust that permeates the minds of all fair-minded men against the Bell telephone combination. No court, no commission, no official body of any character, believing in fair play, would countenance or permit such methods on the part of a public service corporation in dealing with its competitors. It is, really, scarcely conceivable that a billion-dollar concern like the American Telephone & Telegraph Co. should stoop to such petty work to throw a little business to its factory—the Western Electric Co.—which is, comparatively, financially speaking, a two-spot. Presentation of these facts before the Federal authorities undoubtedly will lead to a radical reform in the present intolerable condition.

Western Electric Co. Gives Up Independent Business

Vice-President Swope Says Company Will Not Further Solicit Independent Business Owing to Shortage of Materials—Force of Salesman Covering Independent Territory Disbanded—Move Believed Caused by Fear of Anti-Trust Laws—"Telephony" Wins Long Fight

The Western Electric Co.—the Bell telephone factory—has decided to withdraw its salesmen from the Independent telephone field. It has disbanded the force of men which has been soliciting business from Independent operating companies and word has gone out that the company will hereafter devote its active attention to American Telephone & Telegraph equipment.

TELEPHONY believes that this move is taken in order to escape the consequences of legal punishment for the Bell combine's unfair competition, inasmuch as the fire was getting hot from Independent interests who were protesting against the intolerable situation. The Western Electric officials, in an evasive statement, explain their action by saying that a rush of Bell orders, difficulty in obtaining raw materials, etc., necessitated the change of policy. The reader can take his choice.

FIRST ANNOUNCEMENT OF MOVE.

The first announcement of the Bell withdrawal was contained in the following item published in the Chicago Daily News on June 17:

"The Western Electric Co., it was announced today, has called in all its so-called 'non-associate' salesmen who formerly solicited business from Independent telephone companies. For the present, at least, the Western Electric, which is owned largely by the American Telephone & Telegraph Co., has withdrawn entirely from the Independent field.

'Our action was necessitated by the fact that we are so rushed with business on orders from the associated Bell companies that we are unable at present to undertake any more work,' Frank A. Ketcham, western district sales manager of the company, said in explanation of the withdrawal of traveling salesmen. 'It does not represent any permanent policy. In our business now, there is a shortage both of labor and raw materials. Prompt deliveries of material are difficult to obtain. The fact that we are now soliciting no business from Independent telephone companies is due to these conditions.'"

When this announcement appeared, TELEPHONY sent the following telegram to Gerard Swope, vice-president of the Western Electric Co., New York:

"Chicago Daily News announces Western Electric Co. has withdrawn from Independent telephone field. Please give us authoritative statement for publication in this week's TELEPHONY. Send by Tuesday."

STATEMENT AUTHORIZED BY MR. SWOPE.

Mr. Swope's reply by telegraph, under date of June 20, is as follows:

"Owing to extraordinary conditions that exist in raw material market, we are experiencing great difficulty in procuring many kinds of material required by our factory. Unfortunately, we are having greatest difficulty in obtaining the most commonly used materials, such as copper, rod and sheet brass, iron, steel and paper. You will recognize that these materials enter broadly into all kinds of telephone apparatus and cable.

Because of these conditions and the unprecedented demand for our products, it is impossible for our factory to keep abreast of the incoming orders. In fact, it has frequently been necessary, of late, to stop work at the factory until further materials were received.

We are, therefore, not soliciting any business from customers. We shall endeavor, of course, to take care of the demands of our customers who have standardized on our products. We cannot hope, however, to do much more than this under existing conditions. We hope by this action to have and to be able to produce sufficient merchandise to fulfill the demands that will be made upon us. As soon as the situation improves sufficiently to warrant a change in our practice, notice to this effect will be issued promptly."

DENY OTHER REASONS THAN SHORTAGE OF MATERIALS.

TELEPHONY'S New York correspondent, also under date of June 20, sent the following telegram in reply to one asking him to secure such facts as possible and an interview with Western Electric officials:

"The Western Electric Co. has stopped all soliciting for new business. This is equivalent to a withdrawal of salesmen from the Independent telephone field. However, it is denied that agitation against the Western Electric—American Telephone & Telegraph sales combine, or the specific provisions of section 10 of the Clayton act, had anything to do with the new order to the Western Electric salesmen. The reason given is the difficulty experienced in getting raw materials necessary for the manufacture of telephone equipment. It is declared that the former policy, which amounted to a monopoly of the Bell companies' equipment purchases and open-market bidding against Independent manufacturers in the Independent field, will be returned to as soon as conditions improved in the raw material market.

The statement made by Vice-President Gerard Swope, of the Western Electric relative to the company's action has already been quoted.

It was reiterated that the new order applies generally and has no special reference to the Independent field.

The operation of the order, however, only affects the solicitation of Independent telephone equipment business, as the Bell companies are required to purchase from the Western Electric and no special solicitation in that direction is necessary.

W. E. ATTITUDE AS OFFICIALLY EXPRESSED.

In response to a question as to whether this, in effect, did not mean that the Independent manufacturers were given a clear field, the answer was made that this was true, but it was added that Independent manufacturers were probably also suffering from conditions in the raw material market to an extent where the apparent freedom from competition would probably be greatly offset. In other words, the Western Electric attitude, as officially expressed, was that while the company is forced to withdraw from the market for the time being, it will continue to keep up the business it has already procured and expects to re-enter the Independent field in no wise hurt by the present experience.

In view of the Interstate Commerce Commission's activity in seeking to interpret the provision of the Clayton law having to do with competitive bids for common carrier purchases; in view of the bill in the senate to prohibit telephone companies from engaging in the sale of merchandise; and in view of complaint before the Federal Trade Commission—there is some ground for the belief,

moreover, that the Western Electric has thought it wise to withdraw from the Independent field, at least until the present agitation blows over.

Intimation of Government Pressure.

There is also an intimation that this development has followed government pressure, as it is believed that Washington officials frowned on the conditions wherein Independent manufacturers were barred from bidding for Bell business while the Western Electric Co. could go into the market against Independents. In this case it is possible that the new regulations will be permanent if they are accepted as a sufficient concession by the Independents and the agitation is dropped. Otherwise, the way has been left open to go back to the old order of things. This would mean that the Bell interests accept the challenge and will fight them out on the interpretation of the Clayton law.

There is a precedent in this matter, however, and those who watched the developments in the American Telephone & Telegraph—Western Union dissolution, believe there is another answer to the question: 'Will the Bell interests fight and risk public sentiment?'

In the case of the dissolution mentioned, an agreement was reached with the government and the Bell company came out of the predicament a 'Benevolent Trust' and as setting an example to other large corporations in the way of voluntary dissolution.

It would seem, therefore, that first of all, the Bell in this will seek an agreement satisfactory to the government as to Western Electric sales methods. The new Western Electric order may be a first concession. Whether further concessions will be granted may depend entirely upon whether the force of the present agitation against the Western Electric's method has been expended or not."

The official announcement by Gerard Swope, vice-president of the Western Electric Co., issued from New York under date of June 20, is the first authentic statement of this move of the Western Electric Co. to cease its activities for obtaining Independent telephone business. While Mr. Swope's statement is guarded—a shortage of material and labor are the reasons advanced—it is generally believed in telephone circles that this move was made necessary on account of the anti-trust laws.

Officials of the Western Electric Co. deny that agitation against the American Telephone & Telegraph Co.—Western Electric Co. combine, and that the specific provisions of section 10 of the Clayton act had anything to do with the withdrawal. It would seem the same reasons that forced a separation of the American Telephone & Telegraph Co. and the Western Union Telegraph Co. governed in this withdrawal of the Western Electric Co. from the Independent field.

Telephony's Part in Victory.

Telephony, for many years, has pointed out the unfairness of the relationship of the American Telephone & Telegraph Co. and the Western Electric Co., and has been instrumental in having bills introduced in Congress, protests made to the Attorney General, and action brought before the Federal Trade Commission, all asking that this monopolistic alliance be removed from the telephone field.

This publication pointed out two ways in which this could be done—one was the severance of the Western Electric from the American Telephone & Telegraph control, thus making it an independent company; the other, and the one the Bell officials have accepted, was the withdrawal of the Western Electric Co. from selling telephone equipment and supplies to Independents. Ever since the Western Electric invaded the Independent field, Telephony has protested at every opportunity, and has fought the unjust conditions resulting, until the Bell officials were compelled to announce their withdrawal from making sales to Independent companies.

It is a matter of record that the Western Electric Co. has lost money on all the business done with Independent operating companies, so that this move is good business for the Bell people, and will, of course, be very beneficial both to Independent telephone manufacturers and operators.

If Mr. Swope's statement is correct—that the move was made purely on account of the scarcity of labor and raw materials—then it would seem very unfair that all of the efforts of the Western Electric Co. should be devoted to supplying equipment to the Bell companies, leaving the Independent companies to do the best they can in the open market. But, of course, the Western Electric's explanation is 99 per cent. "bunk." It is to save the Bell factory's face.

It has been pointed out many times that Independent companies dealing with the Western Electric did so at their peril, and that sooner or later they would regret their acts. It is hard to understand why the Bell concern should spend so many years trying to build up a business in the Independent field and then suddenly cease selling in that field and let out all its Independent telephone salesmen if it were not compelled to by fear of the laws. It does not seem logical that the Western Electric Co. would devote all its time and facilities in supplying Bell companies, which are compelled to buy from it and neglect the companies that have been so hard to secure as customers in a competitive market.

This publication believes it would have been better and fairer if the Western Electric Co. had come out with a frank statement that it was through selling to Independents and would confine its future activities to making and supplying Bell equipment exclusively. This is really what the movement amounts to. Unquestionably, the company was forced to this move by the weight of public opinion, section 10 of the Clayton anti-trust law, and the different legal proceedings and protests that were under way.

In justice, Telephony believes it is entitled to the credit of this victory on account of its 16-year fight against the Bell's attempted monopoly of the operating field, and its ten-year fight against the Western Electric Co. monopolizing the telephone manufacturing business.

Arrangements for Sale of Federal Telephone Property.

In advertisements appearing in recent issues of Buffalo and other Eastern newspapers, announcement was made by the Federal Telephone & Telegraph Co. of the completion of a contract to transfer its property in New York state to the New York (Bell) Telephone Co. Bondholders of the Frontier Telephone Co., the Inter-Ocean Telephone & Telegraph Co., the Federal Telephone & Telegraph Co., 7 per cent. preferred stockholders of the Federal company and holders of bonds of subsidiary companies, it was stated, may exchange their securities for the stock of the American Telephone & Telegraph Co. upon the terms hereinafter named. The transaction, however, is subject to the following conditions:

1. That the public shall approve the transfer of the Federal property to the Bell company.

2. That the transfer shall also be approved by the public authorities—municipal, state and federal.

3. That the Federal company shall secure the consent of the holders of three-fifths of its stock to the transfer.

Upon the consummation of the transfer, the announcement states, the Federal company will be in position to deliver

(a) $600 par value of American Telephone & Telegraph Co. stock for each $1,000 par value of 5 per cent. bonds.

(b) $75 par value of American Telephone & Telegraph Co. stock for each $100 par value of Federal Telephone & Telegraph Co. 7 per cent. preferred stock.

A Big Month

War—Telephone Sales—Big Business

By J. C. Kelsey

June is a record breaker. In every state, men and boys are trooping to armories and are leaving for the mobilization ground. The demand for preparedness has borne fruit, and no one has reason to believe that, as a nation, we are less warlike than any other country.

Whatever the justice of the Mexican situation, the fact remains that national respect is still a difficult thing to affront. Men may have to die or be crippled for life, but they have been doing so willingly since time began. Their only regret will be that they have but one life to give for their country.

Any man's life is the property of the state. The state may take life on the gallows or in the electric chair. The state can call any one of us forth to defend its boundaries, or its lives and property, from invasion.

By the same token, it is being realized that corporations and utilities are also wards of the state. A telegraph line, a telephone system, a railroad, or any industry may be taken over by the state in a twinkling of an eye. The state can destroy this property without compensation if the welfare of the state is at stake.

In times of peace, as well as in times of war, the state has control over property. It can exercise its police power to the limit, and no authority can stay its hand. It reveals itself in the form of state utility commissions, the Interstate Commerce Commission, the Federal Trade Commission and other governing bodies.

All these bodies visualize the natural demand that common good is the goal of human ambition. In other words, the right of the small business man is equal to the right of the big business man. And if the big business man over-rides the rights and privileges of the small man, he can be restricted, if not destroyed.

One of the greatest American fallacies is that efficiency is the child of big business. It is a common fallacy that a big factory, covering a square mile, can produce and undersell a factory covering a square block. It is a common fallacy that an industry must be big in order to compete for business in foreign lands.

In fact, some men, high in political circles, go so far as to say that in order for America to compete in foreign lands, America must grant monopolies to its industries. In other words, in order to succeed in foreign lands, the small man should give up his business, be the ward of a corporation in middle life, and the ward of the state in later life.

Recently, news has come through the press that the Bell company has decided to alter the selling policy of its factory. As the world knows, the Western Electric Co. has a monopoly on all Bell business and endeavored by every human activity to acquire a monopoly of the Independent telephone trade.

At heart, every man in the Bell ranks, as well as in the Independent ranks, knew that the situation was unjust and was becoming a menace to the welfare of a great number of people. Such a situation, unnatural as it was and so utterly un-American, began to breed its own diseases.

First of all, the injustice of the situation began to attract the attention of the Interstate Commerce Commission. Then it began to fall under the shadow of the Federal Trade Commission for a test as to its fairness. And it began to crystallize in a bill in the United States Senate which forbade any telephone or telegraph company to sell goods in the merchandising world.

Usually when much smoke exists, there must be fire. And it began to dawn upon everyone alike that the common good demanded the adjustment of a seriously unfair trade condition.

Regardless of what radical critics may say, the Bell company is capable of great good. By its concentration of capital it can accomplish things for the telephone business which cannot be done otherwise. If it would recognize its other half, the locally-owned plant, which exists in its quiet and effective way, there would be an ideal combination of strength.

All human giants have gigantic diseases which shorten their lives and make miserable their years of life, and no reason exists why industrial giants do not likewise suffer.

If the Bell giant stopped short today and contented itself in developing the legitimate business which literally crowds its doors, it would have the proudest position in America. But when such a concern supports a seething ambition to have a monopoly, both in operating and manufacturing telephones, it encounters a double-edged sword.

First, it neglects the legitimate business, which comes to it honestly and even enthusiastically.

Secondly, it seeks that which is troublesome and unwelcome, something like a man who scorns an honest girl's affection and seeks to win the coquette with the hand-made complexion. Needless to say, a divorce follows, just as trouble follows when an industry insists upon its unwelcome attentions to other people's rights or property.

If there is truth in the assertion that the Bell company has recognized the demand that it withdraw from the Independent telephone sales field, it has no reason to be ashamed.

It has always been suspected that the very nature of things made the manufacturing company lose money on the undertaking. It has been proved, beyond all question of doubt, in the Central Union case, that the profit of the Western Electric Co. was entirely upon Bell sales, and that the sum total of ten years' Independent telephone sales had shown a loss. That such a condition should finally be proved is not surprising, because the conditions of manufacturing for Bell companies has been fixed for a lifetime.

Every Bell company orders its equipment a year ahead of time, while items of Independent business, besides being relatively small, are handled on the moment. It would not be surprising to find that incompatibility between the Bell and Independent demands was the predominating feature.

It would not be surprising to find that the Bell licensee managements were the strong objectors to an unjust situation. Never in industrial history has a condition of business so ruthlessly tread upon so many friendly as well as hostile toes.

If the Bell company has been courageous enough to face the issue as stated by the press, it has given us a welcome demonstration that its officials are amendable to reason. We have long suspected that somewhere in the bosom of the Bell

company, was some real true business ambition, and not a schism which is so outwardly prominent.

We may yet realize that beneath the hard, unsmiling face of cruel monopoly, there may be a kindly interior and a business brain which prefers to be constructive and not to burn competitors in the public square.

The columns of TELEPHONY have teemed with criticism and protest against the Bell interests. It has not been a pleasant thing to do—to stand out in the market place and cry against anyone.

It would be vastly more pleasant to teem with constructive enthusiasm, backed by a realization that all our industries were sharing in the constructiveness.

No human being with a single dollar invested in the telephone business, in either Bell or Independent enterprises, has had much reason to wax enthusiastic over telephone matters.

We have worried over many things which had no material existence. Our daily lives reveal that same amount of business and profit year by year. But somehow, we are disturbed by visions and dreams of the future.

And we have had reason to be disturbed, too, because one great irresponsible financial brute has been in the china shop. A bull in a china shop has no constructive tendencies whatever, and, in fact, endangers his own life.

Instead of the Bell bull running wild in the telephone china shop, it should be engaged in increasing its telephone earnings from the deadly mediocrity or $38.45 per station to a decent level. There is plenty of work right there.

It may not be illegal for the Bell company to carry out its ten-year policy of selling telephone apparatus to the Independent field. The Attorney General of the United States might smile at any attempt to invoke the aid of the government.

Other government officials might even scoff at our presumption to oppose the great and only honest monopoly. But that does not prove the case at all, because moral and economic wrongs are greater factors than mere legal mishaps. Economic wrongs right themselves automatically and quickly, while moral and legal wrongs may last centuries.

After all, profit and loss are the most powerful factors, and curiously enough, they are always a remedy for the common good of the greatest number.

If it is true that the Bell company has withdrawn from the Independent field, and has freed all Bell employes from the galling servitude of salesmanship without pay, we have awakened from a ten-year nightmare.

The entrance of the Western Electric Co. into the Independent telephone field was a mistake. It has cost it many millions of dollars and undoubtedly has taught its officials many valuable lessons.

It has taught all of us many valuable lessons, and particularly that small industries, the same as nations, can fight long after stomachs are empty. It has made us conscious of a great unsuspected strength.

The Western Electric Co., wasting its strength and energy in a disputed as well as an unwelcoming field, was compelled to go out into the byways and hedges for things and devices it should have developed itself.

Called upon to install a great automatic system in a European city, which it vainly attempted to design and build, the company had to spend millions of dollars in obtaining shop rights from the very Independent manufacturing companies it set out to vex. And when the Norway city finally receives its automatic system, any telephone man will easily recognize the sources of the installation. Independent telephone brains will give this city the service it desires.

The telephone business is big enough and vital enough to keep everyone busy on his own problems. Possibly it was in the triumphant flush of Theodore N. Vail's career that he unloosed this troublesome factor in our lives.

If he had it to do over, possibly he would reverse himself to a greater degree, for men, even with big salaries, can make big mistakes. But it seemed to them that all their problems were settled, and the telephone world was standing in line at the Western Electric gates. Anyone might have made the same blunder.

It is problem enough to face the conditions of every state in America. Bell policy in New England is unlike Southern Bell or Southwestern Bell. Not a territory has like conditions and much is lost because one policy must be applied to 48 conditions.

The problem of government ownership, particularly, confronts the telephone business because the Bell company wrongly educated the public. It deliberately teaches them that government ownership is the desired goal.

The problem of eliminating loss is before the Bell company. Such localities as Galesburg, Paris, Bloomington, Mankato, South Bend, and countless others should be sold to the Independents. The Bell officials have plenty to do.

Regardless of self-appointed critics, I want to express the hope that the new policy of the Bell company is a sincere one. I should like to see the day when a telephone magazine can rejoice in a great constructive business, one in which every man glories and prospers. I still believe the Bell company is amenable to reason and big enough to throw down the bars.

Even if its management is not yet conscious of its strength, and unwilling yet to test it, there are some who believe it can stand alone.

It can stand alone, and can afford to be generous, even to a fault, because it can never properly succeed without the help and sympathy of all Independents.

It is pretty hard for a man getting a big salary, sitting in a big chair in a high building, overlooking the greatest seaport during his reflections watching great steamers come and go, and surrounded constantly by flatterers, to believe that he is an ordinary human being subject to ordinary human laws.

He is likely to go the kingly pace even though the deluge may come after. Mistakes can be made in any walk of life, and no man is exempt. The biggest thing in life is to admit a mistake and correct it.

MORAL: To err is human.

Earnings of Keystone Telephone Co.

The Keystone Telephone Co., of Philadelphia, Pa., has issued its comparative statement of earnings for the combined companies for the month ended May 31, 1916, and for the five months ended on that date, as follows:

	For Month Ended May 31, 1916.	Year Previous.	For Five Months Ended May 31, 1916,	Year Previous.
Gross earnings	$121,702	$113,548	$595,868	$557,277
Operating expenses and taxes	60,695	54,662	297,045	276,164
Net earnings	$ 61,007	$ 58,886	$298,823	$281,113
Less interest charges	27,453	26,511	137,265	132,119
Net surplus	$ 33,554	$ 32,375	$161,558	$148,994

Webster (S. D.) Plant Sold to Dakota Central.

A deal was recently closed whereby the Webster Telephone Co., of Webster, S. D., disposed of its local exchange and farm lines to the Dakota Central Telephone Co., of Aberdeen, S. D. E. E. Micael, the present manager of the Webster exchange will remain until August 1.

"Telephony's" Home Study Course for Telephone Men

A Complete Presentation of the Principles Underlying Modern Telephony in All Its Branches—Arranged Systematically So That Regular Reading and Faithful Study Will Qualify Ambitious Men for Higher Positions—Prepared Under Supervision of Stanley R. Edwards—This Section Written by Jay G. Mitchell

Quiz Questions on the Preceding Installment.

408. What provision must be made in all multiple switchboard circuits as to the strength of current flow in that part of the circuit which fixes the busy test voltage?

409. Why does the answering supervisory lamp remain dark when the call is being answered by the operator?

410. Why are two windings placed upon the one iron core in the supervisory relay shown in Fig. 147?

411. How are absolutely balanced impedances obtained in certain double-wound relays?

412. Give a useful concept of the nature of the double winding battery feed impedance shown in the circuit of Fig. 147.

413. Why is it most important that the two windings of double-wound battery feed relays be properly connected?

CHAPTER XVIII. Circuit Analysis (Continued).

414. *Insertion of answering plug creates new circuit conditions.*—Since the answering plug, *M* (Fig. 147), has been inserted in the answering jack, the relay, *C*, has been operated by current flowing over the battery circuit traced in section 409. Since the relay, *C*, is operated, its armature breaks the circuit of the lamp, *H*, at *O* and connects the wire, 16, to the sleeve, *S*, of the answering plug, *M*. Instead of following a path through the lamp, *H*, and the two resistances, *I* and *E*, in parallel, the current to operate the cut-off relay, *B*, is now compelled to pass through the resistance, *E*, the wire, 16, the sleeve of the plug, *M*, and the cut-off relay, *B*.

It has been shown in a previous section that it is desirable to maintain approximately the same strength of current flow through the cut-off relay, in order to preserve uniformity in the quality of the busy test. Therefore, in the circuit shown in Fig. 147, the resistance, *E*, is designed to be equal in the cut-off relay circuit to the *joint* resistance of the lamp, *H*, in parallel with the resistances, *E* and *I*. In other words the resistance from the junction point, 19, to the sleeve of the plug, *M*, is the same whether the armature of the supervisory relay, *C*, has or has not been operated.

It may be remarked that the cut-off relay circuit is momentarily broken when the armature of *C* is passing from its normal position to its operated position. This is true, but the time interval is so slight that the armature of the cut-off relay, *B*, is not released to the slightest degree from its operated position. This is a very good illustration of the retention of a relay armature for a short time after the current has been withdrawn from its winding. (See chapter on relays.)

415. *Circuit conditions produced by operation of cut-off and supervisory relays.*—The analysis of the circuit shown in Fig. 147 has covered its operation to a point at which the line relay, *A*, is de-energized owing to the withdrawal of the operating current from its windings. The circuit over which the line relay operating current flows, is now broken at the contact points, 4 and 5, of the cut-off relay, *B*. The armature of the cut-off

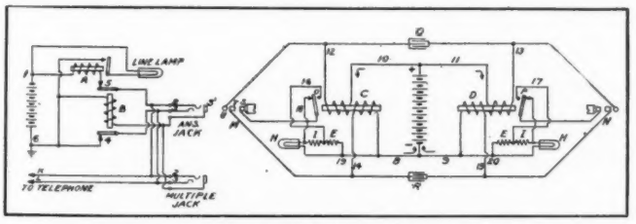

Fig. 147. Circuit With Double-Wound Supervising Relays.

relay, *B*, is in its operated position and will remain so as long as the plug, *M*, remains in the answering jack. This is true, of course, until the plug, *M*, is *actually withdrawn*, regardless of whether transmitter current is being fed out over the line circuit or not. In other words, the cut-off relay *must* remain operated as long as the plug is in the jack. The line, therefore, owing to the busy test, is inaccessible to all calls. For this reason it is most important, in any multiple system, that the display of the supervisory signal be followed by instant removal of the connection.

Assuming that the call has not yet been completed to the called telephone, the supervisory relay, *C*, is operated, its armature being retained as a result of the transmitter supply current flowing out through the two windings and the tip and sleeve of the cord to the calling telephone. The supervisory lamp, *H*, associated with the answering end of the cord circuit is dark, its operating circuit being broken at the supervisory relay contact, *O*. These conditions may now be made a new basis for further analysis of the operation of this circuit.

416. *Analysis of the operation of the calling cord.*—The continued analysis of the operation of the circuit shown in Fig. 147 is, therefore, an analysis of the operation of the calling cord in completing the connection, and of both cords in the final disconnect. While consideration of the operator's telephone set may be left for a later discussion, it may properly be assumed that telephonic communication has been established with the calling subscriber over the answering cord and plug and that his order has been received. If the called-for line is not engaged, a condition indicated to the operator by the absence of the busy click when the sleeve of its jack is tapped with the tip of the calling plug, *N*, the plug may be inserted.

In making an analysis of unfamiliar or complicated telephone switchboard circuits, it is always advisable to draw

one complete line circuit equipment to represent the called-for line where only one line circuit is shown in the drawing. This is much safer than an attempt to carry the two-line conditions—calling and called—in mind.

In the present example, Fig. 147, it may be assumed, for the moment, since the connection with the calling line has been covered, that the multiple jack and line equipment shown belong to the called-for line. When the calling plug is inserted into this multiple jack, the cut-off relay of the called line is energized over a battery circuit that is traceable as follows:

Starting at the non-grounded or negative terminal of the battery, it leads to the wire, 9, to the junction point, 20, through the lamp, *H*, in parallel with the resistance, *E* plus *I* (lighting the lamp), through the back contact of the armature, *P*, in the normal or non-operated position, to the sleeve contact of the plug, *N*, the sleeve of the multiple jack, the winding of the cut-off relay of the called-for line, thence to the grounded or positive terminal of the common battery.

417. *Results of current flow in circuit as regards the calling line.*—The flow of current through this circuit operates the cut-off relay of the called-for line, thereby disconnecting its line relay from the telephone circuit. It also creates a difference of potential between the sleeve of the called-for line and any other testing plug, indicating that it is engaged and preventing the intrusion of any other connection during the period after the insertion of the plug and prior to the removal of the called party's receiver. It is most important that the called-for line be guarded throughout the *entire* period that the calling plug is in the jack.

418. *Operation of the calling supervisory lamp.*—When the conditions outlined exist, the supervisory lamp associated with the calling cord, is glowing. This is necessary in order that the operator may be advised when the called-for party answers. In order that the lamp, *H* (calling cord, Fig. 147), should be bright, the armature, *P*, of the calling supervisory relay, *D*, must be in the normal position. Should it happen that the armature, *P*, were in the operated position, the lamp, *H*, would be darkened, indicating to the operator that the called party had removed his receiver from the hook.

Tracing the non-grounded terminal of the battery out through the rear winding of the relay, *D*, and assuming that the called-for party has not as yet removed his receiver from the hook, will show that no flow of current is possible through either of the windings of the relay. The armature, *P*, therefore is not operated and the lamp remains bright. Together, with the operator's circuit, the method of sending *ringing current* out over the called-for line will be left for later analysis.

Under the conditions outlined, the called line will present a busy test to all other calls, the calling supervisory lamp, *T*, will glow and no current will flow through the windings of the calling supervisory relay, *D*. The reason that no current can flow through the windings of the supervisory relay, *D*, is because there is no completed path joining the two sides of the telephone circuit. This path will be completed when the called-for subscriber removes his receiver from the hook. When this occurs, it is very evident, in the circuit shown, that the supervisory relay, *D*, will be operated in exactly the same way as the supervisory relay, *C*, was operated previously when the answering plug made contact between its terminals and the jack springs of the calling telephone line.

When operated, the relay, *D*, creates an entirely new set of circuit arrangements. By means of its armature, *P*, the resistance, *E*, is substituted for the resistance offered jointly by the lamp in parallel with resistance, *E* and *I*, in series. This causes the lamp to become dark, and permits approximately the same strength of current flow in the winding of the cut-off relay as before. The darkening of the lamp advises the operator *instantly* upon the removal of his receiver, that the called party has answered.

It is to be noted that one of the great advantages in the common battery plan of operation lies in this automatic and instantaneous supervision. It is evident that the call has been completed to the point at which current will flow to both telephones through the windings of the supervisory relays so long as the receivers remain off their respective hooks. This current will instantly cease to flow over the circuit when the receiver is replaced. The only remaining function for the switchboard equipment to perform in the completed call is the disconnect.

While the connection exists with the receivers off their hooks, both supervisory relays are energized by the flow of current through their windings to the two telephone circuits. When either of the connected parties replaces his receiver on the hook, this flow of current through his battery feed supervisory relay is at once interrupted and its armature is released. With the armature in the normal position, the supervisory lamp is lighted and the operator is advised that the receiver has been replaced.

It is to be again noted that, regardless of whether the receivers have been replaced or not, the connected lines will test busy to other connections until such time as the plugs are removed from their respective jacks. For this reason it is most important, as has been pointed out in a previous section, that all connections be removed at once upon the brightening of the supervisory lamp; otherwise the line is closed to any other waiting call, although not in reality engaged for conversation. *(To be Continued.)*

Movement to Honor Inventor of Electromagnet.

Some progress is being made in the effort to raise $30,000 with which to erect a granite and bronze monument to Prof. Joseph Henry, whose invention of the electromagnet made the development of the telephone and telegraph possible. The monument will grace the little swarded and shaded park fronting the Albany (N. Y.) Academy where Professor Henry taught during the years of his experiments, 1827-1831. Prof. Michael I. Pupin has volunteered to raise $15,000 of the necessary amount. The general committee of which Prof. Henry P. Warren, headmaster of the Albany Academy, is chairman, is engaged in interesting local professional and business men to the extent of making contributions for the remaining $15,000.

Celebrate Anniversary of Automatic in Zanesville, Ohio.

In commemoration of the first anniversary of the installation of automatic telephone service in Zanesville, Ohio, by the Ohio State Telephone Co., officials and heads of departments with their wives enjoyed a picnic and dinner at Moxahala Park, Tuesday afternoon and evening, June 13.

Proceedings Before Commissions, Courts and Councils

Discussions and Rulings of State Bodies Having Supervision Over Telephone Companies, Decisions of Courts in Matters of Interest to Public Utilities and Actions of City Councils Relative to Franchises, Rates and Service

I. C. C. Hearing on Purchases of Common Carriers.

The Interstate Commerce Commission, on Tuesday, June 20, held the hearing in regard to the rules to be adopted by the commission in putting into effect section 10 of the Clayton act. The larger part of the day was occupied by the attorneys for the railroad companies in presenting their interpretation of the law and their suggestions as to modifications of the tentative rules submitted by the commission, which were published in TELEPHONY of May 6.

After the railroad companies had presented their case, A. G. Meads, of Chicago, spoke for the Kellogg Switchboard & Supply Co., and F. B. MacKinnon for the United States Independent Telephone Association. Mr. Kelley, of Cassoday, Butler, Lamb & Foster, of Chicago, the attorneys for the minority stockholders in the Central Union receivership case, presented the question to the commission as to the status of the contracts entered into, previous to the passage of the Clayton act, between the Central Union and the Western Electric Co., which contracts could not be entered into under the attorneys' interpretation of the Clayton act. Mr. Kelley asked for a ruling from the commission on this point. The Bell company did not appear.

All interested parties were given 20 days by the commission in which to file briefs, or other statements, in regard to the propositions submitted at the hearing. The commission reserved its decision until these briefs have been filed and it shall have had opportunity to look into the matter. Mr. MacKinnon took occasion to call the attention of the commission to the fact that rule 7 of the tentative rules submitted, required reports from thousands of small companies that, from the amount of business done by them and the character of their organization, never would be subject to the requirements of section 10 of the Clayton act in that they would never, in any one year, purchase a total of $50,000 of material or equipment. He requested, in behalf of these companies, that rule 7 be omitted so that only those companies would be required to make reports as are required to do so by section 10 of the Clayton act.

Under the rules as presented by the Interstate Commerce Commission, practically all of the Independent companies would be required to make a report showing purchases made by them from any one or any company having an agent or officer who was also an agent or officer or director of the telephone company. In all the small companies the merchants of a town are the directors, and it would be practically impossible for the company to do business without purchasing supplies from some of its directors. By so doing, they would come in the class of companies described in rule 7 of the tentative rules submitted.

Hearing on Colorado Telephone Investigation.

The fourth of the series of hearings before the Colorado Public Utilities Commission, in its investigation into the reasonableness of the rates and adequacy of the service of the Mountain States Telephone & Telegraph Co., in Colorado, was begun at Denver, on June 12.

Revenues and disbursements of that portion of the company's property in Colorado and the question of depreciation of property were considered at the hearings. The telephone company, through its counsel, has taken the position that physical depreciation is without effect oro value in fixing a valuation of the company's property and that efficiency only should be considered. In other words, it is contended that the fact that a piece of machinery depreciates in market value as soon as it is installed and operated, should not be considered so long as it does efficient work and gives 100 per cent. efficient service.

In other cases, the commission has ruled that it is an "indisputable fact" that machinery and physical property do depreciate in value and has ordered utility corporations to set aside depreciation reserves annually to cover such depreciations.

At the Tuesday morning session, June 13, Roderick Reid, general auditor for the telephone company, testified that the company in 1912 made a net profit of $1,522,405 in the state of Colorado. This dropped to $1,516,419 in 1913, and $1,258,296 in 1914. The net profit for the first eight months of 1915, he stated, was $915,778.

The following figures relative to the earnings and expenditures of the telephone company in Denver for the year 1914 were submitted:

Exchange service revenue	$1,160,474
Toll service revenue	229,039
Miscellaneous operating	23,474
Total revenue	$1,412,988
Maintenance expenses	$ 159,962
Traffic expenses	288,610
Commercial expenses	195,322
General and miscellaneous	77,856
Uncollectable accounts and other operating expenses	30,715
Taxes	61,129
Rents	1,379
Interest and amortization	9,463
License expenses	60,762
Total expenses	$ 885,198
Net revenue	527,790
Non-operating revenues	31,291
Total net revenues	$ 559,081

The receipts from the Denver exchange have decreased since 1912, when the net revenue amounted to $791,595. In 1913, the net profit was $763,091.

A comparison of the net profit reported by the other exchanges throughout the state for 1914 showed that the greatest earnings, outside of Denver, were made by the Pueblo exchange which cleared $100,967; Colorado Springs, with three small subexchanges, made a profit of $94,780; Trinidad, $36,340; Boulder, $30,160; Greeley, $27,702; Leadville, $25,138, and Canon City, $18,685. The smaller exchanges averaged from $1,000 to $4,000 profit.

Fred W. Herbert, expert for the commission, took the stand after Mr. Reid had finished his statement and testified that he had rechecked the figures submitted. He said that according to the books of the company they were correct in every detail. He had made no examination, however, to determine whether or not the figures had been correctly applied on the books.

The commission decided that it would be useless to continue the investigation until this could be determined and therefore announced an adjournment until July 12. In the meantime, Mr. Herbert will make a minute examination of the company's methods of bookkeeping to find out

if the figures given represent the true earnings of the company in that state.

Negligent Delay at Central Exchange.

The plaintiff in this case was a subscriber to defendant's telephone system. The defendant, it was alleged, agreed to furnish him telephone communication, especially to the fire station and the residence of the fire chief. After plaintiff's residence was discovered to be on fire and beyond plaintiff's control, the complaint alleged, he was unable to get a response to his telephone call for about 15 minutes. A neighbor tried to get the central office, but could not, whereby the fire department was delayed 20 or 30 minutes, in consequence of which the residence was partly destroyed, to plaintiff's damage. The evidence tended to show that the delay might have been caused by the failure of the alarm bell at the fire station to work, and also that the water pressure was weak and the hose defective.

The court held that the evidence was insufficient to show that the negligence of the defendant was the "proximate cause" of the loss. Southwestern Telegraph & Telephone Co. vs. Thomas; Court of Civil Appeals of Texas; 185 Southwestern, 397.

Supreme Court Ruling as to Height of Telephone Line.

The Supreme Court of Iowa has reversed the action of the Sac City district court, in the case of Ernest Wegner, appellant vs. Joseph H. Kelley, of Sac City, holding that a telephone company must maintain its lines on the highways in such a shape that any farm vehicle may safely pass beneath them. The defendant was ordered to pay damages for the injury inflicted on the plaintiff in being dragged from a load of hay while passing under a telephone wire.

Consolidation of Plants at Nevada, Mo., Proposed.

A movement is on foot for the consolidation of the Nevada Telephone Co. and the local exchange of the Missouri & Kansas Telephone Co., in Nevada, Mo. At a recent meeting of the city council a committee was appointed to confer with representatives of the two companies relative to the proposed merger.

Goltry (Okla.) Plant Operated by Municipality.

The board of trustees of the town of Goltry, Okla., has purchased the telephone exchange at that place and the plant is now being operated as a municipal enterprise. A. R. Moseley, Jr., owner of the exchange prior to its sale to the municipality, will remain in charge.

Subscriber Not in Arrears for Telephone Rental.

Where a contract for telephone service provided that by paying an additional fee a subscriber could pay his quarterly rental during the second instead of the first month, the subscriber was not in arrears at the time of removal of the telephone during the first month. Harbaugh vs. Citizens Telephone Co., Supreme Court of Michigan, 157 Northwestern, 32.

Summary of State Commission Hearings and Rulings.

CALIFORNIA.

June 27: Hearing in San Diego on application of the Pacific Telephone & Telegraph Co. to have rates established throughout the state.

COLORADO.

July 12: Continued hearing on the investigation into the reasonableness of the rates and adequacy of the service of the Mountain States Telephone & Telegraph Co. in the state of Colorado.

FLORIDA.

June 27: Hearing to consider charges of discriminations in rates by the Home Telephone Co., of Jacksonville, Fla.

ILLINOIS.

June 3: The commission authorized the sale of the lines of the Western Illinois Telephone Co., of Macomb, in Schuyler county to the Schuyler Telephone Co., of Rushville, Ill.

June 14: Upon motion of the petitioner, the commission dismissed the case of the Interstate Independent Telephone & Telegraph Co. against the Carroll County Telephone Co., of Savannah, relative to rates charged by the latter company from Milledgeville to Coleta, Morrison, Prophetstown and Sterling and from Chadwick to Coleta, Morrison, Prophetstown and Sterling.

June 19: Hearing at Springfield in the case of the city of East St. Louis, Ill., vs. the Southwestern Bell Telephone Co. of Illinois and the Kinloch Telephone Co., relative to rates charged for telephone service in East St. Louis. Case 5,100.

June 19: Hearing at Springfield in the matter of the application of the Interstate Independent Telephone & Telegraph Co. for an order ratifying its action in issuing certain notes aggregating $47,683. Case 5,083.

June 20: Hearing at Springfield in the matter of the application of the Niantic (Ill.) Telephone Co. for an order authorizing the issue of $3,000 of its common capital stock and the issue of $8,000 of its preferred capital stock, the issue of $8,000 par value of its first mortgage 6 per cent. gold bonds and authorizing the execution of its deed of trust to Walter Pritchett as security. Case 5,153.

June 21: Hearing at Springfield on the application of the Mississippi Valley Telephone Co., of Carthage, for authority to remove discriminations and approval of schedule for rental and switching rates at Carthage and vicinity, Elvaston, West Point, Basco, Sutter, Fountain Green, Adrain, Burnside, Warsaw and Dallas City, Ill. Cases 4,663, 4,664, 4,833.

June 21: Hearing at Springfield in the case of the Jasper County Mutual Telephone Co. vs. the Commercial Telephone & Telegraph Co., and the Newton Telephone Co., on the complaint of refusal of the respondent to make a physical connection through the Oblong Telephone Exchange to the city of Robinson. Supplementary petition filed by citizens of Willow Hall and vicinity that prayer of complainant be granted. Case 4,793.

June 21: Hearing at Springfield in the matter of the application of the Massac County Mutual Telephone Co. for an order authorizing the issue of its capital stock to the amount of $2,500. Case 5,033.

June 23: Hearing at Springfield on the application of the Patoka Telephone Exchange for a certificate of convenience and necessity to operate a telephone system in the village of Patoka, Ill. Case 4,785.

June 23: Hearing in the matter of the application of the Independent Telephone & Telegraph Co. for authority to remove discriminations and approval of schedule for rental and switching rates at Nauvoo, Ill. Case 4,834.

June 23: Hearing the case of the Plymouth Mutual Telephone Co., et al., and W. D. Cloud, rural subscriber, vs. the Farmers Mutual Telephone & Switchboard Co., on complaint relative to respondent constructing and operating a telephone company in the village of Plymouth, Ill. Case 4,992.

June 23: Hearing on the joint application of T. Z. Creel, manager of the reorganization committee of the Western Illinois Telephone Co. and the Farmers Mutual Telephone Co., for approval of traffic contract between the companies for the purpose of better telephone connections and service at Plymouth, Ill. Case 5,165.

IOWA.

June 27: Hearing before the Iowa Railroad Commission for the presentation of legal arguments in the general hearing on high tension interference.

MARYLAND.

July 1: Hearing to consider the new suburban rates proposed some time ago by the Chesapeake & Potomac Telephone Co.

June 16: Hearing at Cambridge, Md., on the complaint of R. T. Creighton, of Fishing Creek, near Cambridge, against the South Dorchester Telephone Co.

MICHIGAN.

June 20: Continued hearing in Detroit on the petition of the Michigan State Telephone Co. for permission to establish a metered service rate schedule in that city.

MINNESOTA.

June 27: Hearing at Moose Lake, Minn., on the application of the Tri-State Telephone & Telegraph Co. to increase its local exchange rates in that city. The community, it is alleged, desires continuous day, night and Sunday service, instead of the present day and limited Sunday service. In order to furnish the additional service, the company asks permission to increase the single line business rate from $1.50 per month to $2 and the single line residence rate from $1.25 to $1.50 per month, other rates to remain as at present.

June 29: Hearing in the case of the Commercial Club of Lake City vs. the Northwestern Telephone Exchange Co. and the Tri-State Telephone & Telegraph Co., relative to a reduction in the toll rate between Lake City and the Twin Cities.

June 30: Hearing in the matter of the application of the

Star Telephone Co., Farmington, Minn., to increase its local exchange rates at Farmington, Lakeville, Rosemont, Mendota, Prior Lake, New Market, Webster, Lonsdale and Northfield.

MISSOURI.

September 18: Hearing in the matter of adopting a uniform system of accounts for telephone companies. Every telephone company in the state has been given notice that it will be expected to be present or to be represented, and to introduce any evidence necessary to assist in the promulgating of a uniform system of accounts for telephone companies. Case 937.

September 18: General conference in which representatives of all telephone companies in the state are to meet with the commission and to introduce all testimony and evidence required in the adoption of uniform rules, regulations and practices for telephone companies, relative to all charges, deposits, contracts, or guarantees for all kinds of service and connections. Case 938.

NEBRASKA.

June 26: Hearing on application of the Monroe (Neb.) Independent Telephone Co. for permission to issue $55,000 of additional stock in payment for the exchange it is taking over in Albion, Neb., and for permission to increase its rates in that city.

June 29: Hearing on application of the Cedar County Farmers Telephone Co., of Hartington, Neb., for permission to increase its rates on residence service at Hartington and Fordyce. A short time ago the company was given permission to increase its rural and residence rates at the towns mentioned, but it later filed an application asking that the order be suspended until a hearing could be held on the new application.

OHIO.

June 20: The commission authorized the Lima Telephone & Telegraph Co., of Lima, Ohio, to issue its common capital stock of the par value of $14,100 and its 6 per cent. preferred capital stock of the par value of $25,900 to be used to pay obligations incurred and to be incurred, upon the purchase of materials and supplies and the construction of additions and extensions to its plant and facilities. Order 867.

OREGON.

June 7: Application filed by the Tillamook County Mutual Telephone Co. for an interchange of service with the Pacific Telephone & Telegraph Co. in the town of Tillamook, Ore.

June 10: The commission authorized the McMinnville Local & Long Distance Telephone Co., of McMinnville, Ore., to impose a toll charge of five cents for the first five minutes and five cents for each additional three minutes between McMinnville and Amity, Carlton, Dayton, Lafayette, Sheridan and Yamhill. The company was also authorized to charge a toll of 10 cents for the first five minutes and five cents for each additional three minutes between Amity and Carlton, Dayton, Lafayette, Sheridan and Yamhill; between Carlton and Dayton, Lafayette, Sheridan and Yamhill; between Dayton and Lafayette, Sheridan and Yamhill; between Lafayette and Sheridan and Yamhill; and between Sheridan and Yamhill. These rates shall apply only for switching via the McMinnville exchange.

Heretofore the McMinnville company had been switching, without charge, all calls received from, or destined to points served by the Lafayette Telephone Co., Amity Mutual Telephone Co., Yamhill County Mutual Telephone Co., of Dayton, Sheridan Mutual Telephone Co., and Yamhill Mutual Telephone Co., when such calls were destined to, or originated with its subscribers, with the exception of the long distance lines of the Pacific Telephone & Telegraph Co., other than to Carlton. This free service, the plaintiff alleged, imposed upon it an extreme burden without any return commensurate with the service rendered.

For local switching in which only two exchanges are involved, 66⅔ per cent. shall go to the company originating the message and 33⅓ per cent. to the company receiving and delivering the message. For through switching in which three exchanges are involved, 33⅓ per cent. shall go to the company originating the message; 50 per cent. to the company operating the intermediate exchange, and 16⅔ per cent. to the company receiving and delivering the message.

The following schedule of rates, in which the single line and two party business rates and the single line residence rate are reduced 25 cents, was ordered put into effect by the McMinnville company: Business, one party, $2.25 per month; business, two party, $1.75 per month; business, four party, $1.50 per month; residence, one party, $1.75 per month; residence, two party, $1.50 per month; residence, four party, $1.25 per month; residence, six party, $1.00 per month.

These rates are for wall type instruments, an additional charge of 25 cents per month being made for desk telephones.

The farmer line switching rate is 50 cents per month, payable quarterly in advance. The order becomes effective July 1. Order N. F. 131.

PENNSYLVANIA.

June 10: The commission approved the sale of the Glen Rock-New Freedom Telephone Co., of Glen Rock, Pa., and the York Southern Telephone Co., to the Bell Telephone Co. of Pennsylvania.

WASHINGTON.

July 5: Hearing on application of the Mutual Rural Telephone Co. for permission to construct and maintain a telephone line on certain county roads in the vicinity of Alpha, Wash.

WISCONSIN.

June 15: The following telephone extensions were authorized by the Wisconsin Railroad Commission:

Prospect, Guthrie & Big Bend Telephone Co.; extension in Berlin, Waukesha county.

Horseshoe Telephone Co., of Kewaunee; extension in West Kewaunee and Carlton, Kewaunee county.

Dane County Telephone Co., Madison; extension in Dunn and Madison, Dane county.

Farmers' Lake Shore Telephone Traction & Electric Power Co. of Algoma; extension in Ahnapee, Kewaunee county.

Cambridge Telephone Co. of Cambridge, Wis.; extension in Oakland and Sumner, Jefferson county.

Delton Telephone Co. of Delton; extension in Lyndon, Juneau county.

Cecil, Green Valley Toll Line Co.; extension in Washington, Shawano county.

June 15: The commission authorized the New Cashton Telephone Co., Cashton, Wis., to discontinue its present rates and substitute the following: Business telephone, one party, $1.50; residence telephone, one party, $1.25; residence telephone, two party, $1.15; residence telephone, four party, $1, and rural telephone service, $1.15.

June 16: Hearing in regard to the application of the Franksville (Wis.) Telephone Co. for authority to increase rates.

June 19: The Interurban Telephone Co., Lake Mills, Wis., filed a copy of its rates, rules and regulations with the commission.

June 19: The Barneveld & Ridgeway Telephone Exchange filed the following rate for nickel-in-the-slot telephones, installed in private and public buildings: $1.50 per month and a rate of 5 cents per local call. If the amount at the end of the month is short of $1.50 the subscriber must make up the difference; if it is over the company must make a rebate of the surplus. All toll messages are at the regular toll rates.

June 20: The commission refused the application for an extension by the Rankin Telephone Co., Algona, Wis., in Casco and Lincoln, Kewaunee county.

June 20: The following extensions were authorized by the Wisconsin Railroad Commission:

Cecil Green Valley Toll Line Co., of Cecil, Wis.; proposed extension in the town of Green Valley, Shawano county.

Wausau Telephone Co., Wausau, Wis.; proposed extension in the town of Ringle, Marathon county; also an extension in the towns of Easton and Marathon, Marathon county.

Denmark Farmers & Merchants Telephone Co., Denmark Wis.; proposed extension in the town of New Denmark, Brown county.

County Line Telephone Co., of Stangelville, Wis.; proposed extension in Franklin, Kewaukee county.

June 20: The Door County Telephone Co. was granted authority to issue $5,400 of stock for the purpose of paying for the construction of new lines.

June 20: The Red River Telephone Co. was granted authority to issue $2,000 of stock for the purpose of extending its line.

June 21: Application filed by the Random Lake Telephone Co., Random Lake, for permission to extend in the towns of Holland and Belgium, Sheboygan and Ozaukee counties. The companies affected are: Cedar Grove Telephone Co. and the Oosburg Telephone Co.

June 21: Application filed by the Reedsburg Telephone Co., of Reedsburg, Wis., for authority to issue $8,000 of stock for the purpose of paying for extensions and additions to its lines.

June 21: Hearing at Milwaukee in the case of Bernard A. Klatt vs. the Wisconsin Telephone Co., on a request for refund. U—950.

June 22: Hearing at Mondovi in regard to the application of the Mondovi Telephone Co. for authority to increase rates.

June 27: Hearing at Wilton in regard to the application of the Ontario & Wilton Telephone Co. for authority to increase rates. U—936.

Practical Subjects—Letters and Discussions

Intermittent Trouble.

In TELEPHONY of June 10 under "Questions on Theory and Practice," some brother asks about an intermittent trouble, referring to switchboard cross talk. On one case of this kind —equipment not advertised in TELEPHONY—some of the drop shutters did not restore when the plug was inserted, and left the shutter in contact with the sleeve of the plug.

In this position, of course, the shutter was also connected to the night alarm circuit. On this "board" we also had trouble with drop coils grounding to core.

If you have a board made by the firm that sends out sample telephones without request, see if the cords do not chafe the cabling to the keyshelf. Asher Hadley.

A Special Toll Line Circuit.

By Frank L. Whitaker.

In some of the smaller exchanges, various methods have been tried out to prevent operators connecting long metallic toll lines with local lines using the earth for return, without using cord circuits equipped with repeating coils. Every telephone man knows, or should know, what takes place when such a connection is made. The result is equivalent to that of one long grounded line—the metallic line is unbalanced and very noisy—and the longer the metallic line, the more noise.

In Fig. 1 is shown the arrangement of a connection between a ground return line one mile long and a metallic toll line 30 miles in length. Although the short line is comparatively quiet and the longer line well transposed and in good condition, a connection between the two, as shown, would render the entire circuit so noisy that conversation would be anything but satisfactory. Careful examination of the drawing (TELEPHONY has published a similar circuit a number of times) will disclose the fact that, instead of a metallic line connection, we have in reality a 61-mile grounded circuit. This is very much unbalanced as are all grounded lines, hence the noise.

Fortunately the small exchange board has a repeating coil cord connection, and the problem is in a method that will encourage the operator to use this connection when it is needed. Occasionally an operator is found who is diligent in putting up the proper cords, but it is not an uncommon occurrence to find a new operator who has had no instruction along this line, possibly disregarding it if she has had it.

A busy operator will sometimes put up a wrong connection unwillingly on account of having no available repeating coil circuit. Many exchange men, to get around this difficulty, have installed a repeating coil in every cord circuit, thus eliminating the difficulty.

The most satisfactory solution, in the writer's opinion, is to install a special repeating coil directly in the toll line which, of course, makes it impossible for any unbalanced

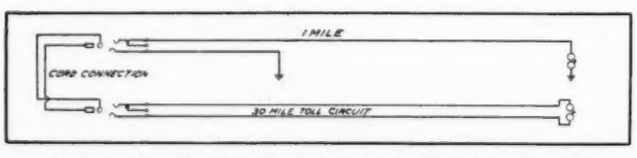

Fig. 1. Metallic Line Connected to Grounded Local Line.

connection. While it is necessary to ring across the windings of a coil at each end of the toll line, no special difficulty is experienced in doing it. The plan also has the advantage of the phantom line. A heavy coil is used for this purpose in every large exchange but the cost of such apparatus, for the smaller plants, seems to be prohibitive. The manufacturers of repeating coils make a smaller coil which is very efficient.

For those companies who cannot afford the expensive coil, or even the lighter one for their toll lines, a plan is suggested in Fig. 2 which will enable them to use the ordinary repeating coil circuit on their switchboards. This ar-

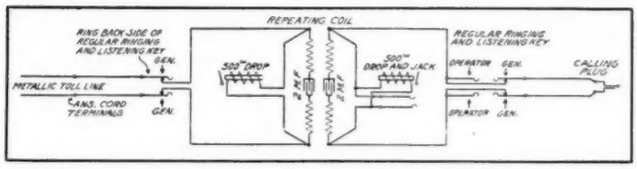

Fig. 2. Suggested Method for Connecting Metallic to Grounded Line.

rangement of wiring is, no doubt, an old one to some readers of TELEPHONY, as it has appeared several times in the question and answer columns. The circuit as illustrated has been carefully tried out in service for a number of years in various exchanges and will well repay any manager to adopt and put into action.

Select a cord circuit at the end of the switchboard having a repeating coil and remove the answering cord. Bring a pair of wires from the toll line arrester and connect them to the terminals vacated by the cord terminals; at the same time, disconnect the switchboard wires running from the toll arrester to the drop. In series with each coil leg, place a condenser of a capacity not less than one microfarad. The regular ring-off drop is bridged across the line side of the coil and a 500-ohm drop and jack combined, across the operator's listening side. This jack will serve two purposes —provide a means of connection in event the calling cord becomes defective and out of commission, and make connection on an outgoing call where the operator desires to make the connection with another pair of cords.

The circuit described has furnished relief to many exchanges and is recommended especially to the larger ones having toll lines terminating in the smaller plants. A toll line equipped at both ends, as shown in Fig. 2, possesses the following advantages over the regular methods:

1. Prevents busy operators from making improper connections.
2. Reduces plug connections on toll calls by one-half.
3. It is not necessary to ring through repeating coils at either end of the line.
4. Encourages operator to answer toll calls promptly as no effort is required to answer, other than to throw the listening key over.

"Telephony's" Home Course for Telephone Men.

(Not meant for study.)

By Well Clay.

There was a "rubberneck," once on a time,
Who was always and eternally "on the line."
No matter if she were snug in bed
She'd *have* to hear what the neighbors said.
So out of her warm nest she'd spring
Whenever she'd hear the telephone ring.
A breath of scandal, by the way,
Loses none of its flavour, so they say,
When over a wire it happens to go,
Any more than it does when whispered low.
She heard all the news in the country 'round
And the things that happened in the town;
She was posted to a dot, and then some more;
If she *missed a trick* it made her sore.
She knew every girl who stayed out too late
And she heard every man who made a date,
With another woman, over the line—
News like that made her feel fine.
Her greedy old ears, day after day,

Gathered the news that passed her way.
She heard of all that happened by day or by night,
The births and the deaths, the man who got "tight"
And whaled the stuffin' out of his wife—
All added some spice to her quiet rural life.

But when she came to the office to pay
The rent of her telephone, she always would say:
"We couldn't get 'Central' for a week or more."
"No one can hear us. Our batteries are poor".
"I never go near the troublesome thing,
But our neighbors answer to every ring."
"I think it's a shame, when we pay for a telephone
That people won't be decent and let us alone."
"I never answered a wrong ring but once,
And then 'Central' sassed me—th' pert little dunce".
"Th' girls that you hire do nothing but read;
You never can get them when great is your need."
And, "Oh, yes! Husband told me when I came away,
He would take out th' telephone if you made us pay
That fifty cents extra, outside of the rent,
Charged up for a message that never was sent."
When the manager dies and to heaven he goes;
He'll leave behind him a bundle of woes,
But the biggest of all he'll leave in his flight,
Is the person who "rubbers" by day and by night.

There is no one so peculiar as a certain type of rural subscriber—unless it be another rural subscriber—and the telephone manager who attempts to handle all kinds with one rule will soon find that he is not progressing very fast. He must handle each and every one in a manner slightly different, according to their several temperaments—and they sure have all of the several.

Most managers will know what brings to my mind these lines for it is at this season of the year when the ravages of the elements through the winter have played havoc with the outside parts of the plant and the "rubbernecks" have attended to their little chores in the homes, that service is the hardest to keep up. The spring rains having made most of the country roads impassible and the frequent storms having kept the linemen from attending to more than the very worst cases of trouble, the result is that what little energy was left in the batteries from the winter's siege has by now gone glimmering.

The fact that there are no roads to speak of that are passable does not suggest to the mind of the rural subscriber that he ought not expect us to get there on the first notice, rain or shine. He does not think anything, except that he wants his telephone service restored. By some process of reasoning he thinks that you will make a special case of his troubles somehow and get him fixed up regardless. I suppose it is the same slant to a person's mind which makes one feel that somehow, no matter what his past life and misdeeds have been, he will be allowed to slide through the pearly gates. His trouble looms the largest to him and, while we may assume that the real value of the service is not of as much moment to him as perhaps a business house in town, yet, to him, his needs are just as important and as much to be considered as the needs of a king. The life of a tadpole is of as much value to the said tadpole as John D.'s is to John D.

You know how it is yourself when you send in an order for some materials which you need P. D. Q. You don't see why they can't be shipped the same day the order reaches the house. Your order is the only one in the house that day—that is, in your mind—and you jump from the primary desire for the stuff to an expectation that it should be forthcoming at once without noting or caring for the difficulties which beset between. The rural subscriber is just that way and we would all be less apt to criticize if we knew the other fellow's routine and what difficulties he is perhaps laboring under while trying his best to serve you.

How little one class of workers knows about the problems with which another class has to deal, even in the same profession, is remarkable. A short time ago a friend asked me to visit a wireless telegraph station and see it in operation. He did this so that he would have the benefit of having me explain the apparatus to him and the whys and wherefores, as he said I was in the electrical business, myself, and would know.

I concealed the fact from him that I was not entirely conversant with the workings of a wireless and told him that I would be glad to go along and explain things to him. I said this in a manner which implied rather that, while it was an old thing with me and might prove to be a bore, so far as I was concerned, yet I did it to be a good fellow. I really went along because, to tell the truth, I had never seen a wireless plant and had only the haziest of notions as to anything in connection with the science.

As we entered the room where the operator was receiving messages from the air, I quietly cautioned my companion to be sure not to allow any parts of his clothing to come in contact with the antenna, and to keep away from the helicons. He anxiously asked what those things were and why they were dangerous, but I hastily signed for him to be quiet, for fear of disturbing the operator, and we sat down to watch. From time to time I whispered fragments of information about the work, as occasion allowed, and I thought of them, but mostly we sat, watched, and wondered what all the apparatus could be for and how human beings had ever had the patience and brains to work out such problems. I believe the machine was about 700 calories, which makes it about a one cylinder on a muddy road, to compare, automobically speaking.

I was getting along fine and not getting tangled up any in my explanations to my friend, so far as he could see, when the operator threw the switch into the sending apparatus, after which lightning struck the house a few thousand times. At least that is what I thought as my head bumped the ceiling, but I found afterwards that the noise was only the effect made by the operator letting loose a few million concussions to wander about in the stellar places, unless captured by some other wireless outfit.

The way that machine vomited forth lightning was terrifying. My companion was too scared to notice that I was frozen stiff, so I didn't let on afterwards. It jingled the Florida Keys, curdled the Milky Way, tickled the Aurora Boric Acid and knocked some of the stars off the handle of the Big Dipper. I do not know what would have happened if an exclamation point had not got turned crossways in passing across the arc, which mixed up the volts with some amperes and throttled down the cathode rays to such an extent that the electrostatic capacity jammed with the rectifier and threw the impedance into series with the hysteresis co-efficient, thus producing magnetic fatigue on the bottom row of potentials and making it impossible for the adapter to harmonize, which is essential for complete asynchronism, as you all know.

The operator was equal to the occasion, though, and saved the situation by switching the polarity, end for end, and backing water quickly with the starboard battery, thus avoiding a catastrophe and getting out of it with only the loss of the king bolt. He surely was a wonder.

On my way home with my friend, I endeavored to explain fully all that I knew about the workings of the wireless and I do not think that he fully realizes yet how much I do not know about it. I do not believe I do myself. However, we are getting away off the subject, like a crowd of men do when they get to talking after supper around a campfire.

They start out on a trivial subject, which suggests another and that another, until they end up 80 miles off the road and three miles up in the air from where they started, having in the meantime discussed everything from six-cylinder cars to infant damnation and the origin of the species.

APHORISM: Why do they do it?

Rock Valley (Iowa) Exchange Changes Ownership.

The Sioux Telephone Co., of Rock Valley, Iowa, has been taken over by the Farmers & Merchants Telephone Co., of Hawarden, Iowa. Wayne Thayer, who has been manager of the Rock Valley exchange for a number of years, will remain in charge.

The Proper Methods of Using Wood Preservatives

Brief History of Preservatives and the Different Processes Developed—Comparative Cost and Length of Life of Treated and Untreated Poles—Abstract of Address Made at Meeting of Benton County (Ill.) Telephone Association

By K. C. Barth

Pole preservation means economy plus conservation. In 1911 approximately 3,500,000 poles were used. Of this total number 2,100,144, or 61.4 per cent., were cedar and 693,489, or 20.2 per cent., chestnut. Thus the cedar and chestnut poles constituted 81 per cent. of all the poles used, or a total of 2,793,633 poles. Of these, 21 per cent. of the cedar poles and 11 per cent. of the chestnut poles were treated. About 70 per cent. of the poles—approximately 2,500,000—were used by telephone companies.

Brush Treatment.

Assuming that all chestnut and cedar poles had been treated by the brush method, their life would have been increased five years, resulting in a decrease in the annual timber cut for poles for replacement, of approximately 1,000,000 poles and an annual saving of $644,000.

Wood preservation is an old problem—the Egyptians and Greeks and Romans worried their brains about it long before the Christian era. The Egyptians used bituminous materials and various mineral salts as well as oils extracted from olives, cedar, larch and from the juniper products, but preferred tar oils. The reason for this is that they preferred to eat the olive oil rather than rub it into the wood.

In the beginning of the nineteenth century, when railroad construction throughout the world became an important industry, the far-sighted men of that time realized the necessity of preventing the depletion of our natural timber resources, and advocated the preservation of wood from decay as the first step in conserving the standing timber. Wood preservation became a leading question of the day and many engineers and chemists devoted their entire time to the solution of the problem—and they solved the problem.

In 1838 four processes were recognized and in use:

Sulphate of copper—patented by Margary in 1837—called the Margarizing process.

Chloride of zinc introduced into the United States in 1838 by Sir William Burnett, called the Burnettizing process.

Corrosive sublimate or bichloride of mercury, invented by Kyan and called the Kyanizing process.

Creosote (or heavy oils of coal-tar) first invented by Franz Moll, but introduced in a practical manner and patented in 1838, by John Bethell and called the Bethell process, or full cell treatment.

Creosoting Industry.

In 1853, 63 years ago, a leading engineering of the time—H. P. Burt—stated that 15 years' experience with creosote oil as a preservative had proven that it was more reliable and stable than any other preservative. The use of creosote oil in this country has grown until in 1915, over 150,000,000 cubic feet of wood were treated. The annual consumption of creosote oil in the United States exceeds 100,000,000 gallons per year. One hundred and twenty treating plants are distributed over the country, of which some 20 use the open tank process.

The report of the United States Department of Agriculture shows that in 1913, 108,373,359 gallons of creosote were used and 3,885,738 gallons of other preservatives including refined coal tar creosotes, carbolineums, etc. In 1914, 79,334,606 gallons of creosote, 9,429,444 gallons of paving oil, and 2,486,637 gallons of refined creosote oils, carbolineums, etc., were used. Of the total quantity used in 1914, 51,307,736 gallons of creosote oil or 65 per cent. of the total quantity were imported from Europe. Still there was a shortage of a little less than 20,000,000 gallons due to the war.

In 1915 the American productions of creosote oil increased by over 10,000,000 gallons—exact figures are not yet available. In 1914, 159,582,639 cubic feet of wood were treated.

Mineral salts are soluble in water, and for that reason the effectiveness of preservative treatment with any of the four previously mentioned processes in which mineral salts are employed, is limited to the use of treated material in exclusively dry situations. They cannot be employed for the treatment of poles and cross arms.

The average cost to set in line a 7-inch top, 35-foot untreated cedar or chestnut pole is $10. The following figures show the comparative cost per year of untreated and treated poles:

Untreated.

Compound interest at 5 per cent. for 12 years on untreated poles	$ 7.95
Principal	10.00
Cost at twelfth year	17.95
Replacement at twelth year	17.95
Cost per pole for 24 years	35.90
Cost per year, per pole	$1.50

The average cost to set in line a brush treated pole is $10.40.

Brush Treated.

Compound interest at 5 per cent. for 17 years	$11.20
Principal	10.40
Cost per pole for 17 years	21.60
Cost per year, per pole	1.27
Saving per pole	.23
	$ 1.50

According to Forest Products Bulletin No. 9, June 18, 1913, 2,800,000 cedar and chestnut poles were purchased in 1911. Had these poles been brush treated a saving equal to $644,000 would have been effected, based on an increase in life of five years.

Only two methods of treatment—the brush and open tank processes will be considered in this discussion. The brush treatment will increase the life of poles five years while the open tank process will increase it from 10 to 15 years.

Dipping Method.

The dipping method as practiced by commercial pole treating plants consists of immersion of the pole butt into the heated preservative for from 10 to 15 minutes. For this work prices ranging from 65 cents to about $1.25 per pole, are charged. The efficiency of this treatment is probably slightly greater than the brush treatment, but any such increase in value is offset by the price charged for treating, and the fact that the pole butt absorbs an excessive amount of oil without increasing the depth of penetration at the ground line in proportion. Therefore, it is my opinion that the dipping method, unless its cost is but slightly greater than the brush treatment, does not warrant the greater expenditure for the increased value obtained.

Fir cross arms generally used in this territory do not last as long as the average brushed treated pole and consequently require treatment. The National Electric Light Association in its report of 1911, stated that the average life of a fir arm is 11 years; pine, 8.7 years; oak, 14.5 years; and spruce, 8.8 years. The dipping method is recommended for brush treated poles and the open tank system for poles which have also been treated by this method.

The treatment of poles with a preservative pays, representing, as it does, a saving of from 16 to 26 per cent., on a conservative estimate, in the annual cost of poles.

The J. G. White Properties, Milwaukee Electric Railway & Light Co., A. T. & T. Co., Commonwealth Edison Co. United Light & Railways Co., Illinois Traction System, numerous railroads, Tri-State Independent Telephone & Telegraph Co., and many other Independent telephone companies all preserve their poles. It is economy—it is a necessity. No up-to-date engineers would set untreated poles.

References: "Recent Results Obtained from the Preservative Treatment of Poles," by F. L. Rhodes and R. F. Hosford, Proceedings of the American Institute of Electrical Engineers, 1915.

"Preservative Treatment of Structural Timber," by H. F. Weiss.

"Report of Committee on Preservative Treatment of Poles," Proceedings of the National Electric Light Association for 1911.

Get-Together Employes' Meeting at Holden, Mo.

A get-together meeting of the employes of the Holden Home Telephone Co. was held at Holden, Mo., on June 13. The purpose of the meeting, which was planned and arranged by Manager M. L. Golladay, was to give the operators and other employes an opportunity to get better acquainted, exchange ideas and have a little social time.

From 4 to 5:50 p. m. the employes were taken for an auto-

Get-Together Meeting of Employes of Holden (Mo.) Company.

mobile ride as guests of the telephone company. On the side of each of the five automobiles which carried the party was a banner upon which was printed in large letters a certain word. When arranged in proper order, as shown in the accompanying illustration, the banners spelled: "Home Telephone Employes Get-Together Meeting." This formed a novel advertising feature, attracting much attention as the automobiles passed through the streets.

At six o'clock dinner was served in Hotel Talmage, after which a business and social session was held in the Commercial Club Room.

Those present were: Mrs. J. C. George, Evangeline Fish, Florence Hagemyer, Anna Caswell, Maude Penrose, Hallie Snow, Nellie Lewis, Marie Dobratz, Grace Turner, Anna Turner, Lola Grimes, Pearl Grimes, Esther Paine, Mrs. Mary Horn, Myrtle Rutherford, Wm. Smith, Arch Grimes, Jas. Grimes, B. D. Ament, John Kinder, H. J. Scheer and M. L. Golladay.

New Associate Members of A. I. E. E.

In the Proceedings of the American Institute of Electrical Engineers for June, the following telephone men are reported to have been elected associates of the institute:

J. H. Corcoran, Portland, Ore., division superintendent of traffic of the Pacific Telephone & Telegraph Co.; H. W. Flanders, Denver, Colo., engineering department, Mountain States Telephone & Telegraph Co.; H. E. Gordon, Rochester, N. Y., telephone engineer, Rochester Telephone Co.; H. H. Howard, New York, plant department, American Telephone & Telegraph Co.; C. F. McKelvey, Denver, Colo., equipment engineer's assistant, Mountain State Telephone & Telegraph Co.; J. F. Morris, New York, engineering department, American Telephone & Telegraph Co.; and Michael Schwartz, Chicago, operating engineer, Automatic Electric Co.

Meeting of Benton County Telephone Association.

The meeting of the Benton County Telephone Association, which was held in Monticello, Ind., on June 15, was attended by representatives of some 17 telephone companies in that territory. A very instructive talk on the proper methods of using wood preservatives was given by K. C. Barth, of the Barrett Co., of Chicago, manufacturer of wood preservatives. An abstract of it appears on the opposite page. Another interesting talk was made by W. W. Washburn, of the Western Telephone Co., of Goodland, Ind., on the use of phantom circuits on rural farm lines. He stated that his company has in operation a number of such circuits and that they have worked satisfactorily to both subscriber and the telephone company.

Two or three representatives from each of the following companies were present: Western Indiana Telephone Co., Goodland, Ind.; T. H. Dixon Telephone Co., Kentland, Ind.; Monticello Telephone Co., Monticello, Ind.; Oxford Telephone Co., Oxford, Ind.; Boswell Telephone Co., Boswell, Ind.; Central Union Telephone Co., Frankfort, Ind.; Remington Telephone Co., Remington, Ind.; Indiana Union Telephone & Telegraph Co., Fowler, Ind.; Parana Telephone Co., Brookston, Ind.; Walcott Telephone Co., Walcott, Ind.; Monon Telephone Co., Monon, Ind.; Lafayette Telephone Co., Lafayette, Ind.; Akers Telephone Co., New Richmond, Ind.; Royal Center Telephone Co., Royal Center, Ind.; Winona Telephone Co., Plymouth, Ind.; Francesville Telephone Co., Francesville, Ind.; Indianapolis Telephone Co., Indianapolis, Ind.; Kellogg Switchboard & Supply Co., Chicago; and Cracraft, Leich Electric Co., Genoa, Ill.

By a unanimous vote the association decided to give to its employes an outing of one day at Ray Park, five miles west of Brookston, Ind. This outing will include all employes of over forty companies and will be held on Thursday, July 20. Arrangements are being made for various forms of amusement and entertainment. In connection with the outing for the employes, the managers will hold their monthly convention at the club house at the park.

To Consider Final Draft of Book of Operating Rules.

On July 10 the traffic committee of the United States Independent Telephone Association will hold a meeting at Columbus, Ohio, to consider in its final form the draft of the proposed book of operating rules, upon which the committee has been at work for several months. In addition to the members of the committee, other Independent traffic men will be present to participate in the conference. It is expected that the book will be published shortly after this meeting of the traffic committee.

While in Columbus the members of the traffic committee will observe the manner in which the operating rules of the Ohio State Telephone Co. are working out. The school for operators in Columbus will be visited, as will also be the operating room.

Keystone Company Makes Improvements in Conshohocken.

The Keystone Telephone Co. has completed numerous improvements to its service in Conshohocken, Pa., which have been under way for sometime past. The improvements include the installation of a new switchboard of the most modern type; and additional trunks to Norristown and Philadelphia.

Fundamental Principles of the Telephone Business

A Reading Course Designed to Present Logically the Principles Which Underlie Successful Organization and Operation of Telephone Properties—Prepared Under the General Supervision of Stanley R. Edwards—Part I, Telephone Economics, by James H. Shoemaker, Completed June 26, 1915—Part II, The Corporate Telephone Organization, by J. C. Kelsey and S. R. Edwards, Completed September 25, 1915—Part III, Telephone Accounting and Auditing, by James H. Shoemaker, Completed January 15, 1916—Part IV, Telephone Finance, by J. C. Kelsey and S. R. Edwards, Completed June 3, 1916—Installments Now Being Presented Comprise Part V, Telephone Advertising and Publicity, Written by Roy D. Mock

Quiz Questions on the Preceding Installment.

8. What is one of the first matters to be considered in advertising?

9. How are type sizes determined?

10. State a basic principle in the selection of type for an advertisement. What is said to be the most legible face of type for ordinary use?

11. How many words per square inch of 8-point type, solid, are used in determining the amount of space a manuscript will fill? How many lines per inch will be made by this size type?

12. What two kinds of cuts or printing plates are in common use? Outline the process of making half-tones. Why should the screen be specified in ordering half-tones? Upon what does the kind of screen depend?

13. What are the distinguishing differences between half-tones and zinc etchings? What color, when present in photographs and drawings, renders it practically impossible to obtain a satisfactory cut? What is essential in order that an electrotype may be made? What kind of cuts are seldom used in ordinary advertising?
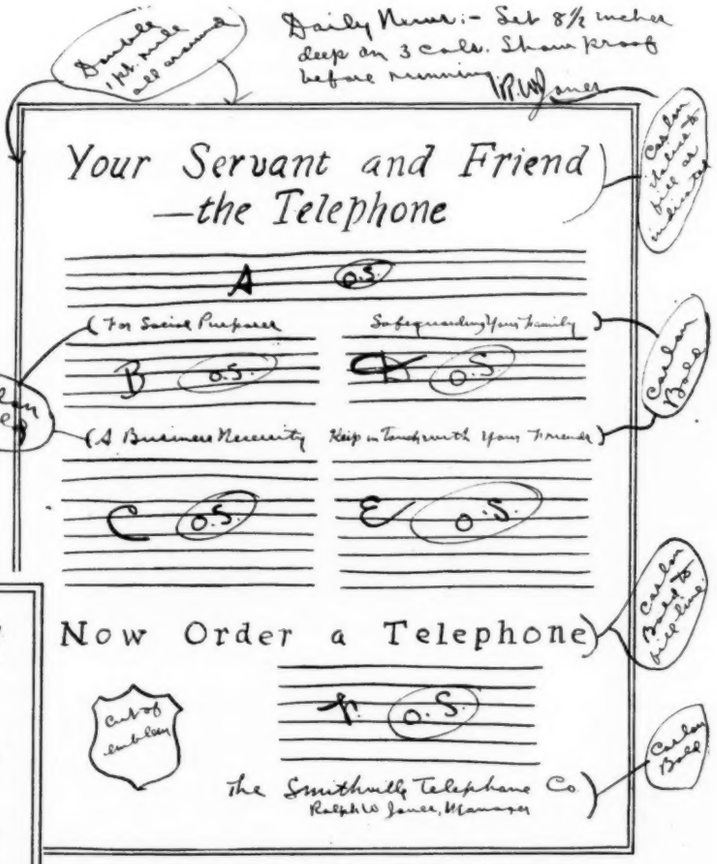
Fig. 5. Typical Layout for an Advertisement.

Your Servant and Friend —the Telephone
Have you ever stopped to think how the telephone is the servant and friend of every telephone user? It is always on the job ready to serve you at any hour of the day or night. Without the telephone, business would have to be conducted as it was a half century ago and you would miss a great deal of the safety and sociability you now enjoy.
For Social Purposes
The telephone is ideal for social purposes as it brings friends and neighbors closer together—within talking distance.
With a telephone in your home it is so easy to arrange little social affairs at the last moment. There is nothing formal about it—you simply call up your friends. Then they come over and you have a jolly evening together.
Safeguard Your Family
When you think of fire or burglars it is mighty comforting to know that with a telephone in your home your family can call for assistance at any hour of the day or night. You may be away but the telephone is there ready to protect them, —to summon aid in case of sickness or danger. To have a telephone in your home is to have fire and police protection always within easy call.
A Business Necessity
The business man knows that without the telephone he would have to conduct his business as his grandfather did—much correspondence by mail and special messenger and many personal calls. Making calls takes time—the telephone saves time. When you write a letter, you must wait for the answer—the telephone brings back an instantaneous reply.
A man in Chicago conducts his entire business over the telephone. An automobile dealer recently placed an order for $60,000 worth of cars over the telephone. Transact your business over the telephone. It is the easiest and most satisfactory way, as demonstrated by actual results.
Keep in Touch With Your Friends
The telephone binds friends closer together by making it possible for them to communicate more easily. If you have no telephone in your home, we are sure you must miss the delightful little chats that our subscribers enjoy. They are in close touch with each other. They can call each other up and relate the latest happenings in the circles to which they belong.
Without a telephone in your home you do not know how many good times you lose out on because your friends can't get in touch with you. Give your family the advantages of a telephone. The enjoyment they will receive from its use will amply repay you for its small cost.
Now Order a Telephone
INDEPENDENT LOCAL AND TOLL TELEPHONE
Have a telephone installed in your home now. The cost is small—only $1.50 a month. For the small sum of 5 cents a day you can enjoy all the social advantages the telephone offers. You can protect your family and property and bring your friends and neighbors closer to you. And think of the pride that goes with the possession of a telephone! "Call me up!" is getting to be a national phrase. Can people call you up? Arrange it so they can.
The Smithville Telephone Co.
Ralph W. Jones, Manager

Fig. 6. Advertisement Made Up from Layout of Fig. 5.

CHAPTER III. Layouts of Advertisements.

14. *The Plan of an Advertisement and Its Purposes.*—The first thing to be done in writing a telephone advertisement is to outline clearly in the mind the form the advertisement should take. In other words, before we build a telephone advertisement, we must first have a plan somewhat in the nature of a blueprint. When definitely put down on paper, this plan is called a layout.

The layout serves two purposes: First, it enables us to get definitely before us the exact form we want the advertisement

to take. Second, it gets our idea to the man in the printing office who is going to set the advertisement in type.

15. *Essentials of a Layout for an Advertisement.*—Now what should a layout include? Well, imagine yourself a compositor in a printing office. If you were called upon to set up an advertisement, you would want to know certain things about it. You would want to know the size of the advertisement; the style of type to be used, both in the body of the advertisement and for the headings and subheads; the kind of border; the location of the cuts, etc. These are the things it is necessary for every compositor to know before he sets an advertisement. It is the purpose of the layout to get the idea clearly to him so he will not have to rely upon his own judgment, which may not be as good as yours.

Fig. 5 shows the way a layout is usually made. Notice how it indicates the location of the cut, the style of type and in some cases the size of type face. The letters *A, B, C,* etc., are used to designate parts of the subject matter of the copy and to show where they are to be placed in the advertisement. Always make the layout the exact size the advertisement is to occupy in the newspaper. Then you will get an idea of how the advertisement is going to look when it is set up in type. Making the layout the exact size also assists the compositor quite materially. Use Fig. 5 as a guide in making layouts, and it is suggested that a layout be made with every advertisement sent to the newspaper.

16. *Steps in Making Up a Layout.*—All that is needed in making a layout is a sheet of paper, a rule and a pencil. Rule a rectangle on the paper the exact size of the newspaper space you are expecting to fill. Next place proofs of the cuts in the positions desired. Then write in the headings and sub-heads in the locations you want them to appear, and in approximately the size of type you expect them to appear. If using a figured border of any kind, do not attempt to draw it in—simply indicate the approximate space it will occupy and show on the layout what the border is. Now count the words in the copy and figure up the square inches in each little sub-division of the

AS MANY IN THIS COMMUNITY HAVE NEVER SEEN A TELEPHONE EXCHANGE IN OPERATION, WE CORDIALLY INVITE YOU TO CALL AT OUR MAIN EXCHANGE NEXT TUESDAY. THAT WILL BE VISITORS' DAY' AND COMPETENT GUIDES WILL BE FURNISHED TO SHOW YOU THE INSIDE WORKING OF A TELEPHONE OFFICE. WE HOPE YOU WILL TAKE ADVANTAGE OF THIS SPECIAL VISITORS' DAY SO AS TO GET BETTER ACQUAINTED WITH THE WAY YOUR TELEPHONE SYSTEM IS OPERATED.

Fig. 7. A Mass of Capital Letters is Hard to Read.

layout. By using Table No. 2, published last week, the size of type the text matter must be set in can readily be determined. It is well to indicate this size as well as the style of type, although if it is desired, the size may be left for the printer to figure out. In this case, simply indicate the type face it is desired to be used.

17. *Instructions to Printers.*—It is a little easier for the printer to distinguish between the layout itself and the instructions regarding it if a different medium is used for instructions. For instance, if the layout is made in pencil, write in the instructions in ink, either red or black. This makes it easy for the printer to separate the two factors.

If a proof of the cut or cuts to be used in the advertisement

As many in this community have never seen a telphone exchange in operation, we cordially invite you to call at our main exchange next Tuesday. That will be visitors' day, and competent guides will be furnished to show you the inside working of a telephone office. We hope you will take advantage of this special visitors' day so as to get better acquainted with the way your telephone system is operated.

Fig. 8. The Eye Reads Easily Capitals and Small Letters.

is on hand, it is well to paste it on the layout. Then there can be no possible chance for mistake. If you have the cuts but no proofs, press the cut on a stamp pad and then make an impression on the layout in the proper place. This will also serve to identify the cuts. Or the cuts can simply be indicated in pencil as has been done in Fig. 5, in which case, however, a note must be written in to identify them.

The copy or wording for the advertisement should be written on a separate sheet and attached to the layout sheet. If it breaks up into different sections, it is well to letter each section to correspond with the position it occupies on the layout. This is clearly shown in Fig. 5.

Fig. 6 shows the advertisement set up in type from the layout of Fig. 5.

So much for what may be called the technical part of making layouts. It should always be borne in mind that just as the plan of a house exhibits all the thinking that has been done in connection with that house, so the layout of a telephone advertisement should embody all the thinking that has been done in reference to that advertisement with the exception, of course, of the copy or manuscript.

(To be Continued.)

Construction Plans of Union Telephone Co., Owosso, Mich.

The Union Telephone Co. will begin work in the near future on the reconstruction of its downtown cable system in Owosso, Mich. Practically all of the lines in the downtown and business districts will be placed underground, at a cost of $40,000. The company's construction gang is now engaged in rebuilding the system at Midland at a cost of $25,000, at the completion of which work will be started in Owosso.

The company is also planning to install automatic long distance service between its Lansing and Owosso exchanges.

Annual Meeting of Northern Indiana Association.

The regular annual meeting of the Northern Indiana Telephone Association, combined with an operators' school, was held at Nappanee, Ind., on Thursday, June 22. The operators' meeting was in charge of W. S. Vivian, of Chicago, secretary-treasurer of the United States Independent Telephone Association.

Personal Items of Interest to the Operating Field

ROY PETERS has been made manager of the Lafayette County Telephone Co., in Darlington, Wis., to succeed Walter Cleary, resigned.

D. O. HAZLETON, secretary, treasurer and general manager of the Dalhart Telephone Co., Dalhart, Texas, was born in Hazleton, Ind., and was educated at the Northwestern University at Evanston, Ill. In 1897 he entered the employ of the Cumberland Telephone & Telegraph Co. as local manager at Hazelton, Ind. He remained with the Cumberland company in various capacities, for eight years. He later entered the mercantile and banking business in Wainwright, Okla.

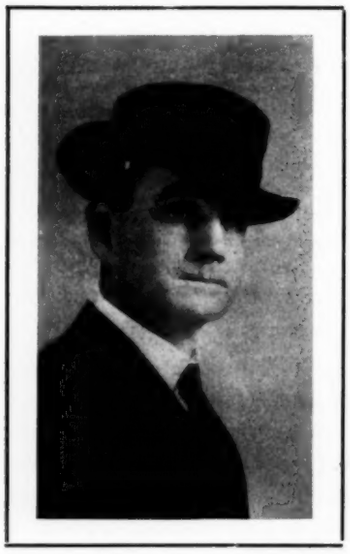

D. O. Hazleton.

In 1910 he went to Dalhart, Texas, and organized the Dalhart Telephone Co., becoming its secretary, treasurer, and general manager, which offices he still holds. Mr. Hazelton owns a controlling interest in the company which operates modern and well equipped plants at Dalhart, Channing and Stratford, Texas. Mr. Hazleton is a director of the Texas Independent Telephone Association.

J. W. SMITH, proprietor and owner of the Canistota Telephone Exchange, Canistota, S. D., has sold his telephone plant to the Dakota Central Telephone Co., of Aberdeen, S. D.

T. W. PATTON, of Springfield, Ill., will succeed George Wiley as manager of the Pioneer Telephone & Telegraph Co., at Durant, Okla.

ERNEST LARKIN, formerly of Hastings, Neb., has been appointed manager of the Pacific Telephone & Telegraph Co., at Pasadena, Cal.

PHILIP D. LAIRD has assumed his duties as member of the Maryland Public Service Commission, after an absence from the board of two years.

GEORGE A. RICK, of Reading, Pa., has been elected a director of the Consolidated Telephone Co., of Hazelton, Pa., to succeed John Graham, deceased.

HOMER B. FALGATTER, of Johnstown, Pa., recently assumed the position of manager of the Russell Telephone Co., of Russell, Kan., succeeding H. A. Frier.

GEORGE WILEY has resigned his position as manager of the Pioneer Telephone & Telegraph Co., at Durant, Okla., to devote his time to his grocery business.

A. B. CURRIE, commercial agent for the Wisconsin Telephone Co., at Superior, Wis., has been promoted to the position of manager of the Stanley, Wis., exchange.

C. A. REYNOLDS has tendered his resignation as chairman of the Washington Public Service Commission, effective July 1, to re-enter private law practice in Seattle, Wash.

E. P. WELLS, of Minneapolis, Minn., was elected an additional vice-president of the Tri-State Telephone & Telegraph Co. at the annual meeting which was held recently in St. Paul, Minn.

WALTER CLEARY, who for the past year has been manager of the Lafayette County Telephone Co., in Darlington, Wis., has resigned to accept a position with the Wisconsin Telephone Co., in Milwaukee.

GEORGE F. BEATTY, who for the past several years has been manager of the Grand Forks (N. D.) branch of the Northwestern Telephone Exchange Co., has been promoted to the position of district manager of the Owatonna (Minn.) district.

H. A. FRIER, president and manager of the Russell Telephone Co., of Russell, Kan., has retired from active management of the plant and will take a much needed rest. Mr. Frier still retains his interest in the company and will continue to act as president.

STEWART JOHNSON, of Caledonia, N. Y., has been appointed manager of the LeRoy (N. Y.) exchange of the Federal Telephone & Telegraph Co., to succeed W. C. Phillips, who resigned to accept a position with the Pavilion Natural Gas Co. Mr. Johnson has been connected with the Federal company for several years as manager of the Caledonia exchange.

C. R. BONNER, manager of the local exchange of the Northwestern Telephone Exchange Co., at Faribault, Minn., for several years, has been transferred to Fargo, N. D., where he will have charge of both the Larimore and Fargo offices.

FRED WOODS, manager of the Anoka, Minn., office of the Northwestern Telephone Exchange Co., will succeed C. R. Bonner as manager of the Faribault, Minn., office.

OBITUARY.

SAMUEL TUCKER, manager of the Courtland Telephone Co., of Courtland, Kan., died recently in a hospital in Kansas City, Kan., at the age of 46.

WILLIAM B. TRASK, well known among the Independent telephone men of Pennsylvania, died at his home in Erie, Pa., on June 4, at the age of 80 years. He had been in failing health for six months, although he retained an active interest in his varied lines of business until the end of his long and useful life.

Just 20 years ago Mr. Trask interested himself in the new and uncertain movement that was then spreading over the country—the establishment of Independent telephone companies in opposition to the Bell monopoly. He became president of the newly-organized Mutual Telephone Co., of Erie, Pa., with its subscription list of 300 subscribers. When more money was required, and few had faith in the venture, it was Mr. Trask who steered the storm-tossed bark over troubled waters. He backed the enterprise financially and interested his friends in it.

Later he became president of the Union Telephone Co., the long distance Independent telephone company operating through Western Pennsylvania and New York, and was also a director of the Petroleum Telephone Co., of Oil City, Pa.

Although at the head of the principal department store of the city, and president of one of the largest banks, besides being interested in a number of manufacturing concerns in Erie, his particular hobby was the Mutual Telephone Co. He jealously guarded its financial policies, saw that ample provision was made on the depreciation account, and carefully avoided anything that would suggest inflation of the securities. He lived to see the company grow from an original capitalization of $25,000 to $1,000,000. It now operates 7,500 telephones, and reaches 80 per cent. of the telephone users of Erie. The Mutual Telephone Co. is recognized as one of the most successful Independent plants in the country.

Mr. Trask's death was a great loss to the Independent telephone companies with which he was affiliated, and to his city. A man of wealth, he was greatly interested in the good of the community, giving liberally during his lifetime, and leaving at his death $300,000 to local charities. He was a man of broad views and kindly disposition, and will be greatly missed by those whose good fortune it was to have been associated with him.

From Factory and Salesroom

A Means of Overcoming the Manual Labor Problem.

In view of the scarcity and high cost of labor, and also the fact that at this time of the year telephone companies are doing a large amount of reconstruction and extension work, any device or means by which manual labor may be reduced, will be looked upon with favor by managers and plant superintendents. With the use of the Lafayette cable and construction machine, shown in the accompanying illustration, it is said that three or four men will do any heavy outside construction work with greater speed and ease than a dozen in the old way.

This machine will, it is said, load and transport the smallest or largest reels of cable or wire, with one man to operate it. It will wind or unwind any size cable reel, wind up or wind down any aerial cable or wire, transfer by steady winding, cable or wire, from one reel to another. It will also pull cables through or out of conduits or, in fact, pull backwards or forward anything desired. Besides the cable or wire handling device, this machine is a complete hoisting engine, with drum and nigger-head, reversible. The machine will lift and set a 65-ft. pole, at the end, on either side, or within 100 degrees

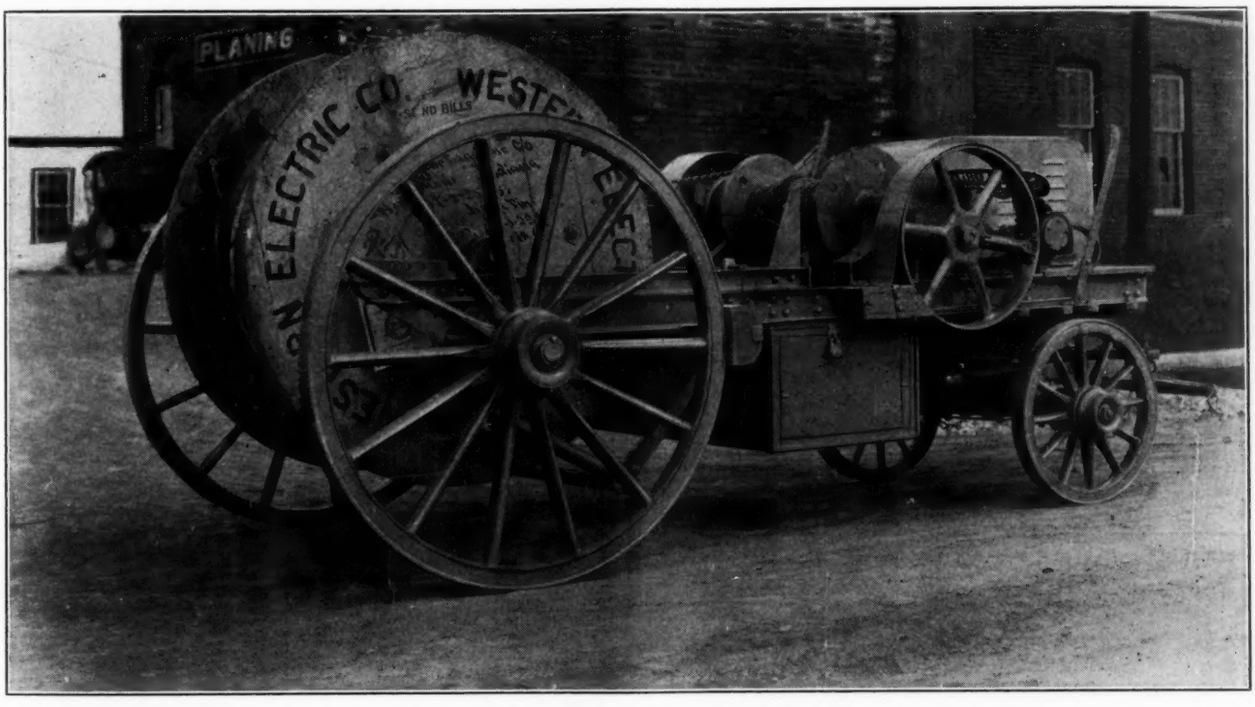

The Lafayette Cable and Construction Machine.

of the axes of the machine. It will lift out and let down any pole that is to be removed, and do numerous other things required in telephone construction work.

The Lafayette cable and construction machine is operated with a gasoline engine of ample power, with spur friction drive from the engine shaft. The handle is so arranged on the drive pulley that one man can operate the machine like a winch, in case but a small amount of work is to be done, or if for any reason the engine is not running.

The rear axle, which is U-shaped, is made of forged steel and supports the frame and lifting lever. The lifting lever revolves about the axle and supports the removable shaft passing through the reel. A strong steel sprocket pulley is placed on the shaft when it is inserted in the reel, and this, through a link chain belt, is driven by a sprocket on the drum shaft in winding the reels. It is stated that cable reels up to seven feet in diameter can be handled with equal ease.

Two slidable hooks upon the lever plates are moved in or out for lifting large or small reels. When the lever is down, the reel automatically runs to its seat directly over the axle. The hooks are then put forward against the permanent half boxes, resulting in a fixed box, or housing, firmly holding the reel shaft in place for operating.

A clutch on the drum shaft engages, by the use of a lever, either the hoisting drum or the driving sprocket wheel. The operating levers are all within reach of the operator, on the right hand side. They consist of a power control, lever-working, friction-drive eccentric, a clutch lever as previously mentioned, an eccentric box lever controlling the reverse and the reverse lever. The driver's seat and the brake lever are on the left side. The engine battery box and a small tool box are under the foot-board on the right hand side. A large tool box for rollers, etc., is suspended under the main frame, which is made of steel channels, and the front support of all is a heavy full platform truck with a double-tree and tongue complete. The rear wheels are 60 ins. in diameter and have heavy spokes, 12-in. hubs and tires 3 by $\frac{5}{8}$ ins.

The machine is neatly painted and varnished, the frame and gear being in buff color, while the machinery is in gray, neatly striped and lettered.

The derrick consists of three pieces of wood, 4 ins. by 6 ins. by 18 ft., which are tapered, chambered, ironed and painted—all of one-man size for handling. To mount the derrick for use, the foot boom is placed in its shoe on the cross frame of the machine and a pin inserted, letting it rest on the reel shaft. Each of the tripod legs are then placed in the end of the boom housing with the pins, leaving the legs outside of the wheels. The hoisting rope is then run from the drum through the sheave at the end of the boom and fastened to the boom near the boom-seat. Hoisting is made to the position wanted, after which the hoist rope is loosened and ready to hitch to the pole.

This cable and construction machine is manufactured and sold by the LaFayette Engineering Co., Lafayette, Ind., from which further information may be obtained.

Advantage of Kellogg Common Sense Key Arrangement.

Twenty years ago ring-back keys were practically unknown. Since it was considered necessary to ring on the calling cord, only the "one-way" ringing key was naturally combined with the listening key giving origin to the "combined ringing and listening key." When the requirements of the farm and toll line traffic demanded facilities for ringing on both cords, the designers of an earlier day simply added a separate "ring-back key." In so doing they overlooked an opportunity to combine the ringing and ring-back keys into a simple push and pull two-way ringing key, leaving the listening key with no other function except listening.

This the Kellogg Switchboard & Supply Co. has been doing on all multiple switchboards for several years. Finding the practical advantages of the new arrangement too great to do without, the combined ring-back key with a listening key wholly separate, has been made standard for the later type Kellogg boards, and its general adoption is earnestly recommended by the company for the following reasons:

1. Impossible for a careless operator to ring a subscriber in the ear by restoring the key violently from listening to normal.

2. Impossible for operator to cut the subscriber off by carelessly allowing her arm to rest on or against the key cams nearest to her. There are no contacts between connected subscribers in the listening key which simply serves to bridge the operator's set across.

3. Speedier operation is secured because in the act of ringing

Fig. 1. Throwing in Listening Key in Reaching for Answering Cord.

the operator simply pinches the forefinger toward the thumb, whereas ringing was formerly a whole arm movement.

4. Operator's listening key can remain tilted while the ringing key is operated either in ring or ring-back direction, and restored without any extra movement as the ringing key is released. Thus while either party is being rung, the operator is on the line with the other party and so is able to discover plant trouble, such as a particularly wet cable, caused by the loud-ringing induction coming back to her ear.

5. Talking contacts are not changed. The operator listens in and the subscribers have exactly same talking condition when the operator is out as when she is in. With worn keys of the older type, it frequently happens that subscribers who have perfect connection while the operator is in on the circuit, are subject to cut-outs while the operator is out of circuit. This is very hard to discover and correct.

6. In small boards using a hand generator, the double-ringing key also serves as a double cut-off key for talking to the parties alternately, for instance, when getting a toll conversation started or in repeating a toll message, as it is sometimes necessary to do between inferior lines or equipment. The same thing can be done on larger boards by simply tripping the power to the hand generator key provided on each position.

The operation of this new type key is self evident, but for the benefit of any to whom this subject may be wholly new, the correct method is given:

First Move: Operator observing a call, reaches for the answering cord of any pair. As her hand passes over the listening key, the latter is tripped to position (See Fig. 1) without any extra motion or loss of time. Whereupon the operator says: "Number?"

Second Move: While the subscriber is giving the number, the operator's hand is dropped to the calling cord of the same pair, which the operator then inserts in the jack.

Third Move: Operator places thumb against the near side of the still tilted listening key and pinches thumb and forefinger together to ring on calling cord (Fig. 2). This position

Fig. 2. Using Kellogg Ringing Key.

naturally places the middle finger between the two keys or against the far side of the tilted listening key which is thus restored to normal position on the conclusion of the ring, without the slightest extra movement whatever. Thus no extra movements are involved either in setting or restoring the listening key.

With these great advantages accruing from a mere arrangement of apparatus in accordance with common sense and modern requirements, states the manufacturer, no one purchasing a new switchboard can afford to follow the "Calf Path of Precedent" by considering the old arrangement of separated ringing keys.

The success of the Kellogg key, judged by the demand, makes the arguments here set forth, of particular interest.

The Champion Dry Cell.

With the completion of a complete, well-equipped carbon and battery plant in Loveland, Ohio, the Champion Carbon Mfg. Co. is in position to furnish both carbon and dry cells for all purposes. J. E. Peavey, who for 25 years

J. E. Peavey.

years was engaged in various branches of the telephone field, recently became associated with the company as vice-president and secretary. It was in 1887 that Mr. Peavey first entered the telephone field in the construction department. Shortly after, he became a telephone exchange manager in which he continued for about four years, when he entered the construction department of the Cincinnati & Suburban Bell Telephone Co., in Cincinnati, Ohio. He became superintendent of equipment and repairs for this company in 1901 and was later made superintendent of exchanges and equipment. In 1910 Mr. Peavey became general traffic supervisor for the Central Union Telephone Co. and continued in traffic work until the fall of 1913 when he opened offices in Cincinnati as consulting engineer.

During his connection with the Cincinnati company, Mr. Peavey designed most of the exchange buildings and equipment installed in that city. He is therefore very familiar with the various problems of telephone operation. This knowledge, obtained through his long experience in

the telephone field, has enabled the Champion Carbon Mfg. Co. to provide a cell for telephone service which is said to be unequalled both in long life and efficient service.

The plant of the company, in addition to having the most modern machinery for the manufacture of carbon and other necessiary parts of dry cells, is well equipped in its laboratory for analyzing, testing and investigating carbon and dry cells. The company is not merely an assembler of dry batteries—it is a manufacturer that manufactures the carbon and other necessary parts of batteries. The heads of the various departments have been in the battery business for many years. Loveland, where the factory is located, upon a plat of land three acres in extent, is a suburb of Cincinnati, Ohio. The plant is located on the main line of the Baltimore & Ohio Railroad and also less than a quarter of a mile from the main line of the Pennsylvania Railroad.

For packing its dry cells a new method has been devised by the company. Corrugated cardboard packages, called "Divisibleunit Lots," are used and 24 cells are packed in each carton. Each cell is separated from the other in

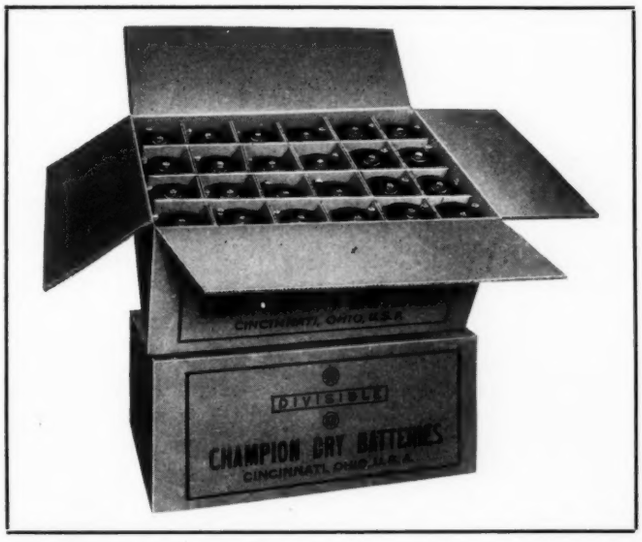

Shipping Package—Divisible Unit Lots—of the Champion Dry Cells.

package by a corrugated cardboard partition. Some of the advantages claimed for this method of packing are:

1. The reduced weight of the box saves money on freight bills. "Divisibleunit Lots" weigh about 50 pounds less than a barrel.
2. No mess to clean up from dirt or straw.
3. The absence of straw reduces the fire risk.
4. The boxes can be easily stacked in the storeroom or placed on shelves, thus saving space.
5. The cells need not be unpacked until needed for use, saving frequent handling and making it practically impossible to lose or misplace batteries.
6. Small orders can be more easily and quickly filled and distributed.
7. Inventory of dry battery stock can be easily and quickly made.
8. It obviates the possibility of "short" shipments.
9. The batteries ship and keep better.
10. Smaller quantities can be ordered to be shipped at stated intervals, thus insuring both dealer and customer of having the freshest cells at their disposal.

The main offices of the Champion Carbon & Mfg. Co. are located in the First National Bank Building, Cincinnati, Ohio. The company, through Mr. Peavey, will be glad to render, gratis, assistance to telephone companies in any difficulty or question that may arise, and to cooperate with them to obtain the highest possible efficiency from their dry cells.

Annual Outing of the Garford Mfg. Co.

The sixth annual picnic of the Garford Mfg. Co., given at Chippewa Lake, Ohio, on Saturday, June 17, is reported

The Garford Shop Girls' Baseball Team.

to have been very successful, notwithstanding the fact that there were many showers during the day.

One of the big features of the day was to have been a young ladies' baseball game between the shop team and the office team, but the game was called in the third inning, on account of wet grounds. The score at that time was 0 to 0, so it was evident that they were playing "some"

Baseball Team of Office Girls of Garford Mfg. Co.

baseball. The interest is so great, however, that the girls of both teams have announced their intention of playing the game again at some later time.

There was present at the picnic a very large crowd of Garford employes, with their families and friends, notwithstanding the threatening weather, and the picnic is said to have been a big success in every way.

Paragraphs.

THE CRACRAFT, LEICH ELECTRIC CO., Genoa, Ill., has during the past few weeks closed contracts with the Salem Telephone Co., of Salem, Mo., and the Lanark Mutual Telephone Co., Lanark, Ill., for two magneto multiple switchboards equipped with electrically-restored drops.

Record of Telephone Patents Recently Issued

1,182,896. May 16, 1916. HEAD SUPPORT FOR OPERATORS' INSTRUMENTS; F. G. Davison, Boston, Mass. This double receiver support comprises a headpiece in combination with a support for the receiver which is movable laterally relative to the headpiece. The support is arranged so that it may be automatically and positively locked in an adjusted position relative to the headpiece.

1,182,926. May 16, 1916. TELEPHONE FOR AUTOMOBILES; J. F. O'Brien, New York. In this equipment for communication between the passengers' and operator's compartments of an automobile, a transmitter and a loud-speaking receiver are mounted in a perforated casing in the operator's compartment. An impedance coil is placed within the casing of the chauffeur's station and in series with the transmitter. The transmitter and receiver for the passenger's use is of the portable type and has an induction coil.

1,182,932. May 16, 1916. PARTY TELEPHONE LINES; O. B. Schnerre, Galena, Ill. A selective call mechanism is placed at each of the stations of the party line and is operable from any one station, all of the mechanisms operating synchronously. One of a pair of oppositely polarized relays at each station is adapted to actuate the collective call mechanism while the other relay is actuated by the selective calling mechanism for closing the ring circuit at the station called. Means associated with the selective call mechanism and actuated thereby close the talking circuit at the station calling.

1,182,962. May 16, 1916. COIN COLLECTOR FOR TELEPHONE TOLLS; W. O. Beck, Ridgefield, N. J., and A. U. Hoefer, East Orange, N. J.; assigned to Western Electric Co. The feature of this coin collector is an attachment in the shape of a metal plate, one end of which is rigidly secured to one wall of the coin collector. The opposite end of the plate may be adjustably secured by means of a flexible bracket, to the opposite wall.

1,182,963. May 16, 1916. ATTACHMENT FOR COIN COLLECTORS; W. O. Beck, Ridgefield, N. J., and A. U. Hoefer, East Orange, N. J.; assigned to Western Electric Co. This attachment consists of a pair of divergent members forming a receptacle and secured to a wedge-shaped block. One of the divergent members carries a deflecting member.

1,182,964. May 16, 1916. ATTACHMENT FOR COIN COLLECTORS; W. O. Beck, Ridgefield, N. J., and A. U. Hoefer, East Orange, N. J.; assigned to Western Electric Co. The plate which comprises this attachment has raised and depressed portions near its center, and an angularly disposed ear formed integrally with it from securing the plate to the collector.

1,182,966. May 16, 1916. TELEPHONE SYSTEM; S. A. Beyland, North Ridgeville, Ohio, and H. L. Harris, Elyria, Ohio; assigned to Garford Mfg. Co. In this trunking system, mechanism for locking up the trunk at a sub-central station is provided, the mechanism being operated by means under control of a listening key while a ringing key controls the mechanism.

1,182,997. May 16, 1916. MAGNETIC CORE FOR INDUCTANCE COILS; W. Fondillar, New York; assigned to Western Electric Co. The feature of this Pupin coil is a plurality of partially transverse air gaps in the core equal in number to a multiple of the number of winding sections with which they are symmetrically distributed.

1,183,135. May 16, 1916. TELEPHONE SIGNALING APPARATUS; S. S. Stolp, Chicago; assigned to Western Electric Co. The interrupting device described consists of a slow-acting magnet which controls oscillating means which in turn control a circuit interrupting mechanism. Vibratory circuit interrupting means are initially actuated by the interrupting means.

1,183,205. May 16, 1916. SELECTIVE SIGNALING DEVICE; H. E. Johnson, Lansdowne, Pa., and C. F. Bower, Philadelphia, Pa. This device is adapted for use on desk stands installed on party lines and indicates to the central operator which one of the party line subscribers is calling. The receiver hook is provided with teeth adapted to bear against one of a pair of conductor springs and force it into contact with the other spring. The teeth are so spaced that the spring will snap back and break the contact before being forced into another contact by the next succeeding tooth. A leaf spring bears against one end of the receiver hook so that each tooth in turn bears against one of the conductor springs.

1,183,214. May 16, 1916. TELEPHONE EXCHANGE SYSTEM; A. E. Lundell, New York; assigned to Western Electric Co. A system of ringing for automatic systems by means of interrupted signaling current is described. A relay is associated with one end and a variable operable circuit interrupter with the other end of the incoming plines. The relay controls automatic means for applying the interrupted signaling current to the outgoing lines and the means for restoring the selector switch.

1,183,404. May 16, 1916. METHOD AND APPARATUS FOR REPRODUCING SOUNDS; R. Rummler, Dayton, Ohio. A spiral inductor coil is placed opposite each face of a dielectric diaphragm and adapted to vibrate it by inducing molecular strains therein and thus producing sounds.

1,183,405. May 16, 1916. RELAY; F. Schoenwolf, Chicago; assigned to Kellogg Switchboard & Supply Co. In this composite relay structure one of the armatures of a pair of electromagnets is a gravity restored one. A latch holds the gravity restored armature in its attracted position when its electromagnet is energized. Actuation of the armature of the other electromagnet operates to release the latch of the gravity restored armature to effect its positive restoration.

1,183,664. May 16, 1916. REGISTERING DEVICE FOR TELEPHONE SYSTEMS; E. M. Northum, Stevens, Ark.; assigned to the Northum Telephone Toll Register Co., Stevens, Ark. The casing of this registering device has a pair of slots near its upper end arranged to receive coins or disks. A central partition within the casing extends upwardly from the bottom and terminates short of a pair of guide chutes. A bell is located in an opening just below the top of the partition and so arranged that disks coming down either chute will strike the bell.

1,183,821. May 16, 1916. TELEPHONE CALL LOCATING SYSTEM; T. G. Martin and J. Erickson, Chicago; assigned to First Trust & Savings Bank, Chicago. In this automatic system, a call-locating device is applied to a certain one of the telephone lines and adapted to co-operate with any calling connector in preventing a release when that particular line is called.

1,183,832. May 16, 1916. AUTOMATIC TELEPHONE RELEASE; J. Erickson, Chicago; assigned to First Trust & Savings Bank, Chicago. The feature of this system is a relay bridge in the selector circuit across the corresponding section of the talking circuit which controls its release mechanism. The bridge may be cut off or opened up during the use of the circuit for talking. There are 54 claims to this patent.

1,183,890. May 23, 1916. ELECTRICAL CONTROLLING SYSTEM; A. E. Lundell, New York; assigned to Western Electric Co. In this telephone trunking system two wires are joined to form a telephonic link while separately they form independently operable closed signaling circuits. A supervisory signal is under the control of one of the circuits and a ringing device under the control of the other.

1,189,923. May 23, 1916. SELECTING APPARATUS; F. A. Watkins, Highland Park, Ill.; assigned to Western Electric Co. In this semi-automatic system a plurality of keys are combined with a plurality of senders. Each key represents a different digit or digits of a decimal system of notation and one sender is provided for each digit place of the highest number designed to be signaled. Relays are utilized for automatically changing the keys from association with one sender to association with the next succeeding sender upon each successive manipulation of a key in transmitting a continuous signal.

1,184,001. May 23, 1916. LOADING COIL FOR TELEPHONE LINES; W. Merz, Berwin, Ill.; assigned to Western Electric Co. In this loading coal for phanton circuits, each line conductor passes through the coil and includes the inner and outer windings respectively of opposite core sections located at different distances from the annular core. The number of turns of an inner winding is greater than the number of the outer winding on the same sections so that the magnetic forces, due to opposing currents in the windings, are substantially a minimum in the space external to the coil.

1,184,020. May 23, 1916. SWITCH STOPPING MECHANISM; J. N. Reynolds, Greenwich, Conn.; assigned to Western Electric Co. The feature of this switch for automatic systems is the provision of a member for engagement with any one of a series of recesses in the shaft of the switch. Movement of this member beyond its normal position in one direction is prevented by a stop which will, however, allow it to be moved in the direction of forward movement of the switch. A tension device tends to maintain the member in its operative position and in engagement with the stop, while an electromagnet moves it to an inoperaitve position.

1,184,047. May 23, 1916. PUPIN COIL; E. Thuermel, Charlottenburg ,Germany; assigned to Siemens & Halske. This Pupin coil is made up of a pair of coils belonging to different lines and wound on the core in portions, one surrounding another. One or more of the portions of each coil is wound on one-half of the core and the remainder on the other half. The number of portions of one coil in any winding plane is

A Reliable Wood Preservative for Brush and Open Tank Treatments Should Be—

1. TOXIC: Poisonous to wood destroying bacteria and fungi.
2. PENETRATING: Readily absorbed by wood.
3. UNIFORM.
4. PERMANENT: Insoluble and non-volatile.
5. CONVENIENT TO HANDLE AND APPLY.
6. ECONOMICAL.

Barrett's Grade-One Liquid Creosote Oil meets these requirements perfectly. It is a well-balanced, non-secret product derived entirely from *Pure Coal Tar Creosote*, the one recognized efficient wood preservative. It is merely a coal tar creosote refined sufficiently to make it suitable for *Open Tank and Brush Treatments.*

Creosoted Telephone Poles Save Money

Brush Treatment of Butts

is readily available to all pole consumers. The method is convenient, effective and economical, and no costly equipment is necessary. You can brush treat your poles in small yards or on the ground previous to setting; and labor charges are but nominal.

Open Tank Treatment of Butts

is the most efficient method for treating poles thus far found practical.

The cost of equipment, however, is such that this method is generally limited to central pole yards, maintained by pole producers and some of the large consumers.

Several pole producers are now in a position to supply telephone poles treated with Barrett's Grade One Liquid Creosote Oil, upon demand. It is to your advantage to specify this material.

Barrett's Grade One Liquid Creosote Oil

By whichever method the butts of the poles are treated, the tops, gains and all other parts exposed by cuts and abrasions should be given a brush treatment with Barrett's Grade-One Liquid Creosote Oil, as is illustrated by the accompanying sketch.

Cross-Arms Should Be Creosoted

The dimensions of cross-arms are such that open tank treatment can be given without appreciable cost for equipment. The labor in most cases of such treatment would be less than by the brush method.

Use and specify Barrett's Grade-One Liquid Creosote Oil. ***It pays.***

Further information free upon request.

The Barrett Company

New York Chicago Philadelphia Boston St. Louis Cleveland Cincinnati Pittsburgh Detroit Birmingham
Kansas City Minneapolis Nashville Salt Lake City Seattle Peoria
THE PATERSON MANUFACTURING COMPANY, Limited: Montreal Toronto Winnipeg Vancouver St. John, N. B. Halifax, N. S.

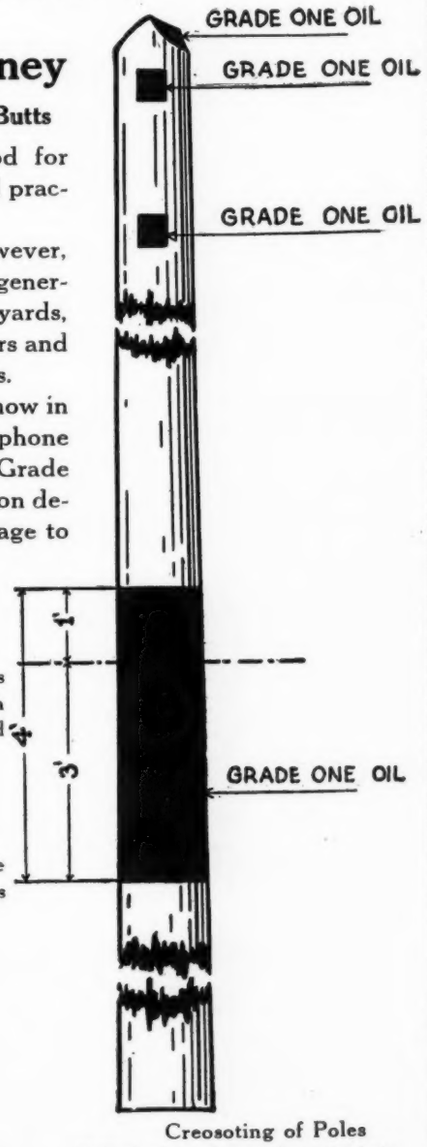

Creosoting of Poles

Method of brush treating pole butt, pole top and cross arm gains, of poles between 25 and 50 foot lengths, when Barrett's Grade-One Liquid Creosote Oil is used.

one more than the number of portions of the other coil in the same winding plane. One or more portions of one coil in any winding plane alternates or alternate with one or more portions of the other coil in the same winding plane.

1,184,162. May 23, 1916. SELECTOR SWITCH; G. A. Betulander, Sodertorns Villastad, Sweden; assigned to the Relay Automatic Telephone Co., Ltd., London, England. In this selector switch for an automatic system, movable line contacts are supported by a member slidably journaled in a movable guide and adapted to be moved by gravity. A catching device is adapted to stop this member in different positions. An electromagnet is adapted to render the catching device inoperative, thereby releasing the slidable member and at the same time operating the guide to move the line contacts out of contact with the contact field.

1,184,163. May 23, 1916. AUTOMATIC TELEPHONE SYSTEM; G. A. Betulander, Sodertorns Villastad, Sweden, O. Grahn, London, England, and N. G. Palmgren, Stockholm, Sweden; assigned to Relay Automatic Telephone Co., Ltd., London, England. In this system a numerical selector is accessible in common to a plurality of trunk lines. A relay is adapted to connect the selector to a calling trunk line, while a marking relay, energized by means actuated by the operation of the subscriber's impulse transmitter, is adapted to control the first-mentioned relay. Provision is made so that more than one trunk line cannot be connected to the selector at any one time.

1,184,376. May 23, 1916. RADIOTELEGRAPHY AND TELEPHONY RECEIVER; G. W. Pickard, Amesbury, Mass.; assigned to Wireless Specialty Apparatus Co., Boston, Mass. Two open-circuited coils are arranged co-operatively to each other and to a receiving coil. A detector is connected to an open-circuited coil and a co-operating indicator.

1,184,434. May 23, 1916. METHOD OF AND APPARATUS FOR WIRELESS TELEPHONY AND TELEGRAPHY; C. D. Ehret, Philadelphia, Pa. This method of electrically transmitting speech through space consists in generating practically continuous electrical oscillations, separately generating other practically continuous electrical oscillations and controlling the latter independently of the former oscillations by and in accordance with speech and simultaneously and independently impressing the energy of all of the oscillations upon the natural media.

1,184,738. May 30, 1916. SWITCHBOARD APPARATUS; A. F. F. Gilson, Closter, N. J.; assigned to Western Electric Co. A mechanically locking type of party line indicating key is described. A plurality of plungers free to rotate, extend through a top plate. A reciprocating member has two parallel side members located one upon each side of the plungers. Roller members are secured at their ends to the side member in position to engage a uniform conical projection formed on the plungers.

1,184,741. May 30, 1916. TELEPHONE EXCHANGE SYSTEM; C. L. Goodrum, New York; assigned to Western Electric Co. In this metering system for automatic exchanges, a polarized meter magnet is included in the connecting circuit. A relay adapted to be energized under the control of the called subscriber, controls in turn the actuation of the polarized meter magnet. An automatic switch mechanism is operated prior to the establishment of the talking circuit and controls means to prevent the energization of the relay.

1,184,742. May 30, 1916. TELEPHONE EXCHANGE SYSTEM; C. L. Goodrum, New York; assigned to Western Electric Co. A call register having a pawl and ratchet is provided for each line of an automatic system wherein the calling lines are associated with a connecting circuit by a non-numerical switch. The pawl of the call register is operated by a magnet to which are transmitted the required number of impulses to cause a detent to engage the succeeding stop of the register ratchet. A slow relay in circuit with the magnet controls the engagement of a retaining pawl with the register ratchet.

1,184,899. May 30, 1916. MOUTHPIECE FOR TELEPHONE TRANSMITTERS; H. F. Vandervort, Loveland, Ohio. This sanitary mouthpiece comprises a holder and a paper speaking tube which is removably mounted in the holder. A diaphragm is located in the speaking tube. When the tube is removed a lid automatically closes the opening of the holder.

1,184,932. May 30, 1916. AUTOMATIC TELEPHONE SYSTEM; A. H. Dyson, Chicago; assigned to Kellogg Switchboard & Supply Co. A relay at the exchange is adapted to be controlled responsive to manually-operated impulse-controlling mechanism at the subscriber's station. A conductor, normally connected with an electromagnet of a step-by-step switch mechanism, is adapted to transmit currents controlled by the relay. Apparatus is provided for disconnecting this conductor from the magnet and connecting it to the electromagnet of a second step-by-step switch mechanism. There are 125 claims to this patent.

1,184,933. May 30, 1916. TELEPHONE SYSTEM; A. H. Dyson, Chicago; assigned to Kellogg Switchboard & Supply Co. In this semi-automatic system the subscriber's lines are provided with spring jacks at the exchange and also selective switches which are adapted to select groups of trunk lines to be used in completing connection with desired lines. Manually-operated link circuit terminals are provided for other trunk lines adapted to be used in completing connection with the spring jacks of desired lines. Calling signals are associated with the trunk circuits provided with the manually-operated terminals to indicate when connection is made with an idle terminal. There are 89 claims to this patent.

1,184,934. May 30, 1916. TELEPHONE SYSTEM; A. H. Dyson, Chicago; assigned to Kellogg Switchboard & Supply Co. A combined manual and automatic system in which some of the lines are provided with manual and some with automatic substation equipment is described. Manually-operated link circuit apparatus is provided for establishing a talking connection between a manually-equipped calling line and any other desired line. An indication is given to the operator of the busy condition of any called line to which connection is sought. An automatic switch mechanism is associated with the lines having automatic subscriber equipment and controlled by this equipment to extend the circuits of their line. There are 99 claims to this patent.

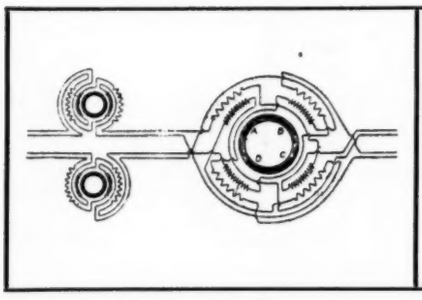

No. 1,184,001.

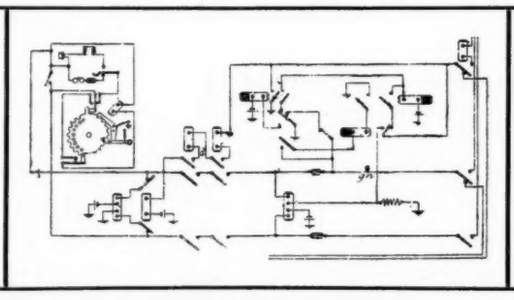

No. 1,184,163.

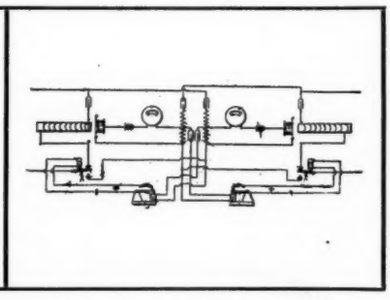

No. 1,185,472.

1,185,086. May 30, 1916. LOCKOUT FOR PARTY LINES OR EXTENSION TELEPHONES; C. L. Goodrum, New York; assigned to Western Electric Co. This lockout is designed more especially for automatic systems. A relay is placed in the line circuit at a common point where the party lines are taken off of the circuit while an individual relay is located in each subscriber's branch of the circuit. The individual relay and the common relay are connected in series with the telephone line through a switch controlled by the common relay when the subscriber initiates a call. The switch is operated by the individual relay to complete a second circuit which includes the line and the relays, upon the opening of the initial circuit by the operation of the switch controlled by the common relay.

1,185,087. May 30, 1916. LOCKOUT FOR PARTY LINES OR EXTENSION TELEPHONES; C. L. Goodrum, New York; assigned to Western Electric Co. In this lockout system a series of cut-out relays, each having two windings, are included in the respective wires of the telephone line, while cut-in relays, individual to the branch lines and each having two windings, are included in the respective wires of the branch lines. The cut-out relays have normally-closed contacts included in the normal connections of the branch lines to the telephone lines and the cut-in relays have locking circuit in shunt of the normally-closed contacts of the cut-off relays.

1,185,331. May 30, 1916. TELEPHONY; M. L. Johnson, Chicago; assigned to Frank B. Cook Co. In this system telephone lines are extended to call-receiving and switching or connect-

TELEPHONE CO.'S TAKE NOTICE
HIGHEST PRICES
Paid for Old Telephone Equipment
Also gold, platinum and silver.
MILLER SMELTING & REFINING CO.
Ellastone Bldg., E. 4th & Prospect St. Cleveland, O.

D. C. & WM. B. JACKSON
CHICAGO Harris Trust Bldg. ENGINEERS BOSTON 248 Boylston St.
Plans, Specifications, Supervision of Construction.
General Superintendence and Management.
Examinations and Reports.
Financial Investigations and Rate Adjustments.

ADSIT TELEPHONE LOCKOUT COMPANY
ESCANABA, MICHIGAN
Manufacturers
Telephone lockout apparatus and automatic timing devices. **Write for circular.**

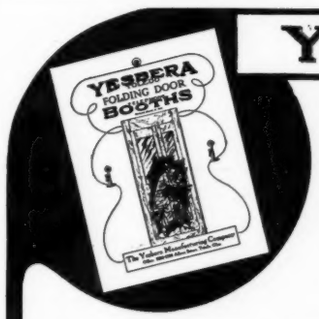

YESBERA TOLEDO
Folding-Door Booths
are rapidly taking the place of all other styles of telephone booths. Yesbera booths represent the perfection of this type, and every person in the telephone business should know all about them. As compared with "old style" booths they save space, improve ventilation, and prevent injuries. A request will bring you full particulars.
Yesbera Mfg. Co. 2308 Albion Street TOLEDO, OHIO
FOLDING-DOOR BOOTHS

Costs less to lay
That is what sold ORANGEBURG conduit to the large Telephone Companies.
ORANGEBURG FIBRE CONDUIT
Long length. Light weight.
Easily put together
Book H
THE FIBRE CONDUIT CO.
ORANGEBURG, N. Y.
NEW YORK CHICAGO
BOSTON SAN FRANCISCO

IT'S UP TO YOU!
To investigate the merits of the
"Vac-M" Lightning Arrester
You owe it to your patrons and to the service.
Why not have real lightning arrester efficiency?
A trial will convince you.
Certainly, we will send you a catalog.
Write to
The National Electric Specialty Co.
Terminal Bldg., Toledo, Ohio

MIAMI TRAILERS
are making good in the telephone field. With a Miami Trailer you can carry the "gang" and materials to the scene of activities, drop them for the day, and utilize you motor truck or car in carrying out other work.
It saves in a hundred other ways.
Write for literature.
Miami Trailer Company
TROY MIAMI COUNTY OHIO

Please tell the Advertiser you saw his Advertisement in TELEPHONY.

ing operators' positions and divided into groups for accessibility by the latter operators, there being a plurality of switching operators' positions for each group of lines. Speech-recording and record-reproducing apparatus is operable by calling subscribers for recording their speech, and switching mechanism is provided so that the speech-recording apparatus is connected with a calling line. Link connectors for extending the calling lines are interchangeably associated with the switching or connecting operators' positions by receiving operators and serve to convey the record reproductions to the selecting operator.

1,185,363. May 30, 1916. SECRET BRANCH OR PRIVATE EXCHANGE SWITCHBOARD; R. M. Beard, New York. The feature of this switchboard is the provision of a cord circuit having two branches each having talking wires normally connected to a source of potential difference. One of the branches is direct and transparent to battery and talking circuits and the other is highly inductive and opaque to talking currents. Provision is made for breaking the first-mentioned circuit when any cord is plugged into communication with the central or city exchange and for telephonically interrupting the cord circuit without destroying the direct current continuity with either branch thereof in the central office.

1,185,369. May 30, 1916. RELAY; Frank B. Cook, Chicago; assigned to Frank B. Cook Co. The feature of this relay is an element interposed between the armature and the contact to be moved by the armature to transmit motion from the armature to the contact. The element has a spaced-apart portion between which an engagement portion of the armature structure is received, and with respect to which such armature portion may have lost motion. One of the spaced-apart portions serves to transmit the armature movement to the contact, while the other serves to limit the extent to which the armature may be attracted.

1,185,370. May 30, 1916. RELAY; Frank B. Cook, Chicago; assigned to Frank B. Cook Co. In this relay, two single-piece armatures enter into the formation of the same armature switch for governing an electrical circuit. The armatures are mounted at one end of the winding and extend beyond the other end of the winding. Two contacts at the other end of the winding opposite to that where the armatures are mounted, pertain to the same circuit. They are operable in opposite directions, one by one armature and the other by the other armature to reduce armature movement.

1,185,371. May 30, 1916. RELAY; Frank B. Cook, Chicago; assigned to Frank B. Cook Co. Symmetrically related cams are carried by the armature of this relay. One cam operates the switching mechanisms carried by the armature and the other operates to limit the retractile movement of the armature.

1,185,372. May 30, 1916. TELEPHONY; E. R. Corwin, Chicago; assigned to Frank B. Cook Co. In this automatic system, groups of link connectors with a master switch for each group and common to the link connectors of each group, are provided for uniting the telephone lines in conversation. Selector switches are operable by calling lines for selecting unselected master switches, each of which are normally associated with an idle link connector of a group. Means governed by the calling subscribers establish connection between selected link conductors and calling lines. There are 124 claims to this patent.

1,185,373. May 30, 1916. TELEPHONY; E. R. Corwin, Chicago; assigned to Frank B. Cook Co. Manual exchange equipment is provided for connecting one telephone line with one of several other lines; also electromagnetic selecting, switching mechanism is available for connecting the first telephone line with one of the other telephone lines. A switch is placed at the station of the first telephone line and controls the line circuit to enable it to effect the operation of the electromagnetic switching mechanism to extend the call.

1,185,374. May 30, 1916. TELEPHONY; E. R. Corwin, Chicago; assigned to Frank B. Cook Co. In this party line system, manual switches are provided with circuit connections whereby one manual switch will operate one electromagnet of a set of magnets for the connectors for the telephone line. Another manual switch will operate another electromagnet of the set, while a third manual switch will operate both electromagnets of the set. A switch is provided for interchangeably associating the manual switches with the sets of electromagnets.

1,185,375. May 30, 1916. TELEPHONY; E. R. Corwin, Chicago; assigned to Frank B. Cook Co. In this semi-automatic system the lines are subdivided into major groups and again into minor groups. Line switches are provided for the lines in each minor group and less in number than the lines for taking part in the extension of the calling telephone line. Operator's equipment is provided at a plurality of operator's positions and by means of a calling-line-operated distributer switch, one of which is common to the lines of each major group of telephone lines, is associated with the calling line connected to the switch. Holding switches, provided for each major group of telephone lines, are interposed between the calling lines preparatory to the connection of the equipment of the line-operated distributer switches and the operators' equipment for holding the calling selected operators. There are 90 claims to this patent.

1,185,376. May 30, 1916. TELEPHONY; E. R. Corwin, Chicago; assigned to Frank B. Cook Co. This patent is similar to the preceding patent and in addition a master switch, individual to each minor group of telephone lines, is provided for rendering operative some line switch pertaining to the minor group having such a master switch. There are 76 claims to this patent.

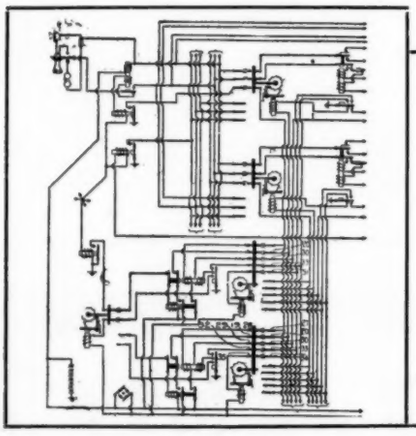

No. 1,185,372.

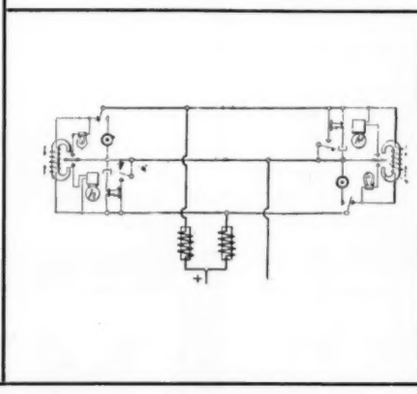

No. 1,186,305.

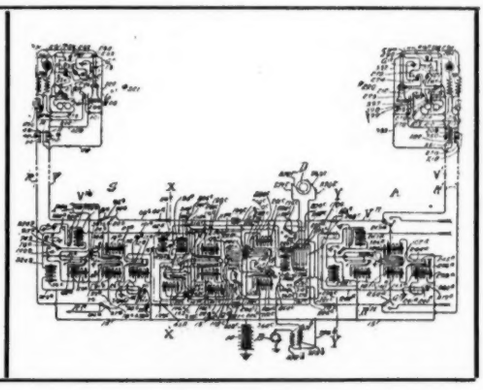

No. 1,185,521.

1,185,472. May 30, 1916. TELEPHONY; S. G. Brown, London, England. In this telephonic relay system between two stations a relay is electrically connected to each station, a switch arm forming part of the electrical connection. An electrical device, operable by magnified speaking currents derived from the relay, controls electromagnetic means adapted to operate the other station-to-relay connecting switch. Movement of this switch from its normal position enables the magnified currents to be transmitted to the station corresponding to the switch.

1,185,510. May 30, 1916. TELEPHONE SYSTEM; A. E. Keith, Hinsdale, Ill.; assigned to Automatic Electric Co. The feature of this patent is a master switch for controlling a group of line switches, one of which is provided for each subscriber's line for selecting idle trunks. The master switch has a continuous selecting motion controlled by a spring and a non-selecting return motion controlled by means of a solenoid magnet. There are 33 claims to this patent.

1,185,521. May 30, 1916. TELEPHONE AUTOMATIC COMMON BATTERY SYSTEM; T. G. Martin, Chicago; assigned to First Trust & Savings Bank, Chicago. The switching apparatus used in this automatic system includes "connectors," each provided with a pair of normally-bridged line relays, and step-by-step devices, controlled by each of the relays, together with the connections whereby current for talking purposes is furnished from the common battery through the relays to a subscriber's line. There are 65 claims to this patent.

1,185,522. May 30, 1916. TELEPHONE EXCHANGE SYSTEM; T. G. Martin, Chicago; assigned to First Trust & Savings Bank, Chicago. A two-way trunk line automatic system is covered by this patent. Line relays, one at each end of the

ERICSSON STEEL TELEPHONES

Five Reasons Why You Should Use Them

1st— They are the handsomest telephones made, and subscribers are pleased with them and take pride in keeping them neat. They put a stop to chronic kickers.

2nd— They are built to last almost indefinitely. The black enamel finish will outlast any known wood polish and will match any color of woodwork or inside finish.

3rd— They cost no more than reliable telephones of other makes, and are worth considerably more to you. They do not deteriorate and they save you the heavy maintenance expense you have been accustomed to with others.

4th— They are made by a manufacturer with a reputation for making the best telephone apparatus known. Their guarantee makes you safe.

5th— You will be using Steel Telephones altogether some day, so why not begin now. The sooner you get acquainted with the Ericsson kind the better pleased you will be later.

BRANCHES AT

Atlanta, Ga., 83 Marietta St.
Birmingham, Ala.
Boston, Mass., 451 Atlantic Avenue.
Butte, Mont., 53 East Broadway.
Cedar Rapids, Iowa, 315 So. Second St.
Chicago, Ill., 14 N. Franklin St.
Cleveland, O., 124 St. Clair Ave., N. E.
Edmonton, Alta, Can., 504 Agency Bldg.
Havana, Cuba, P. O. Box 6.
Indianapolis, Ind., 124 So. Meridian St.
Jacksonville, Fla., 24 W. Forsythe St.
Lincoln, Neb., 136 So. 10th St.
Los Angeles, Cal., 1233 So. Olive St.
Louisville, Ky., 514 W. Main St.
Minneapolis, Minn., 19 N. 6th St.
New Orleans, La., 810 Canal St.
Pittsburgh, Pa., 31 Terminal Bldg.
Portland, Ore., 329 Ankeny Ave.
Richmond, Va., 5 Governor St.
San Francisco, Cal., 530 Golden Gate Ave.
Spokane, Wash., Paulsen Bldg.
Toronto, Canada, 36 Adelaide St.

ERICSSON MFG. COMPANY

1102 MILITARY ROAD :: :: BUFFALO, N. Y.

trunk line, control normally de-energized automatic switches. Switch-operating impulses are supplied over the line in one direction to energize one of the relays, while operating impulses are supplied over the line in the opposite direction to energize th other relay. There are 150 claims to this patent.

1,185,635. June 6, 1916. AUTOMATIC TELEPHONE EXCHANGE SYSTEM; G. Deakin, New York; assigned to Western Electric Co. A system of selective ringing for party lines of automatic systems is the feature of this patent. The connector which

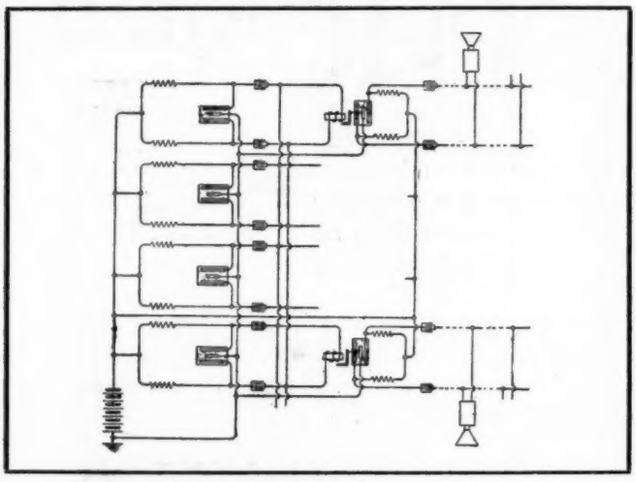

No. 1,185,879.

completes connection between a calling line and the called line, has one called line branch and a plurality of calling line branches, any of the latter of which may be selected by the calling line. A ringer at each station on the called line is arranged to operate only when supplied with a particular kind or arrangement of current. A relay or plurality of relays in series with part or all of the calling line branches of the connector is adapted to supply the proper arrangement or kind of current to operate the ringer at any one of the stations connected to the called line, depending upon which of the calling branches of the connector is selected by the calling line.

1,185,711. June 6, 1916. RECEIVER FOR WIRELESS TELEGRAPHY AND TELEPHONY; G. W. Pickard, Amesbury, Mass.; assigned to Wireless Specialty Apparatus Co., New York. This electric wave receiving apparatus comprises an inductance, a telephone receiver and an interrupter connected in series with each other. The interrupter is arranged to intermittently connect the telephone receiver in circuit with the inductance and thereby operate the receiver by the impulse of current from the collapse of the magnetic field about the inductance.

1,185,843. June 6, 1916. SELECTIVE SIGNALING APPARATUS; M. Setter, Chicago; assigned to American Electric Co., Chicago. An operator's key associated with switch mechanism and a plurality of actuating buttons comprise the telephonic switching device covered by this patent. A plurality of dogs is associated with the buttons and adapted to hold them in a depressed position. A bar associated with the dogs has a loose connection with the opertor's key, whereby operation of the key operates the dogs, through the medium of the bar, to release a depressed button.

1,185,877. June 6, 1916. REPRODUCING AND TRANSMITTING APPARATUS; J. J. Comer, Chicago; assigned to Automatic Enunciator Co. A pair of microphone transmitters is located on opposite sides of a vibrated diaphragm with a felt packing interposed between the diaphragm and transmitters.

1,185,878. June 6, 1916. TELEPHONE AMPLIFIER; J. J. Comer, Chicago; assigned to Automatic Enunciator Co. In this amplifier a pair of microphone transmitters, each having a movable electrode, is mounted upon a base plate adjacent to a supporting plate carried by an electromagnet. Connections extend from the movable electrodes to the opposite ends of the supporting member of the electromagnet's armature.

1,185,879. June 6, 1916. TELEPHONE SYSTEM; J. J. Comer, Chicago; assigned to Automatic Enunciator Co. The conductors of each pair of a plurality of pairs of line conductors are connected together at one end and connected in multiple to one pole of a battery. A transmitter is bridged across each of the pair of line conductors. These transmitters comprise a pair of outer electrodes and a central electrode, the outer electrodes being connected to the line conductors and the central electrode to the opposite pole of the battery.

1,185,938. June 6, 1916. TELEPHONE EXCHANGE; C. L. Redfield, Chicago. A series of switching mechanisms is described. There is a propelling magnet for each mechanism while a selecting lever associated with the mechanism, normally serves to close the electrical connection of the propelling magnet. Movement of the selecting lever from its normal position breaks the electrical connection for the associated magnet and thereby prevents its operation. The movement of the selecting lever also causes an electrical impulse to pass through all of the other magnets.

1,186,049. June 6, 1916. LOCK FOR TELEPHONES; J. S. Stephens, Paterson, N. J. This lock for telephone desk stands is arranged to fit around the top of the standard so that when attached to it the receiver hook cannot be operated.

1,186,051. June 6, 1916. MACHINE TELEPHONE SWITCHING SYSTEM; J. N. Wallace, Antwerp, Belgium; assigned to Western Electric Co. The feature of this automatic system is the provision of a relay for controlling the arresting of the automatic switches in position to extend the calling line. This relay controls a line cut-off relay for the calling line. Means are provided for controlling the first-mentioned relay over the calling line during the operation of the switches, while other provision is made for controlling it through the connecting circuit upon the complete establishment of the connection.

1,186,057. June 6, 1916. OPERATOR'S CORD CIRCUIT WITH REVERTING BUSY TEST; C. S. Winston, Chicago; assigned to Kellogg Switchboard & Supply Co. The feature of this cord circuit for use on party lines where jacks per station are used, is the provision of means, operable during the testing operation, for a busy line to change during the testing the test conditions of a jack thimble connected therewith. These means include electromagnetic apparatus common to the cord circuits and provision to prevent test condition changes in the associated thimbles of the cord circuit when the common apparatus is actuated by the testing operations of another cord circuit.

1,186,305. June 6, 1916. TELEPHONE SYSTEM; E. A. Graham, W. J. Rickets and E. A. Sanftleben, Brockley, England. In this system three wires, of which two are normally at the same potential, extend between the transmitter and receivers at two stations. Relays having armatures movable only in response to current in one direction, are connected across the wires of the same potential. The armatures are adapted to close local circuits for the operation of indicating means. A switch mechanism is adapted to lower the potential of one of the normally equi-potential wires in relation to the other, thereby to permit of voice calls by transmitter and calls by indicating means to be selectively given.

1,186,398. June 6, 1916. DETECTOPHONE; J. E. B. Holladay, Suffolk, Va.; assigned The Holladay Detecto Co., Suffolk, Va. The transmitter and receiver of this detectophone are arranged in series in a two-wire circuit. The primary winding of an induction coil is connected in shunt across the main circuit while the secondary is connected in shunt with one of the wires of the main circuits with a switch interposed.

1,186,450. June 6, 1916. APPARATUS FOR PHONOGRAPHICALLY RECORDING TELEPHONICALLY TRANSMITTED CONVERSATIONS; H. Starcke, Cologne, Germany; assigned to Walseck & Starcke, Cologne, Germany. This apparatus for phonographically recording telephonic conversations without the aid of the called station consists of a two-armed multiple switch, upon one arm of which is a checking lever, and a signal roller which has an electromagnet, the armature of which arrests the checking lever.

1,186,455. June 6, 1916. RADIOTELEPHONY, RADIOTELEGRAPHY AND THE LIKE; W. Torikata, Akita, E. Yokoyama, Sakai, and M. Kitamura, Tokyo, Japan. Apparatus for generating high frequency oscillations is described in this patent.

1,186,462. June 6, 1916. MEASURED SERVICE TELEPHONE SYSTEM; B. D. Willis, Chicago; assigned to Automatic Electric Co. Coin-controlled devices are associated with a calling mechanism in an automatic system and controlled thereby to assess cash tolls of different values when calls are extended from the calling mechanism. Each of the devices requires a different extent of operation of the calling mechanism to render it operative to assess the toll.

1,186,464. June 6, 1916. TELEPHONE EXCHANGE SYSTEM; G. Babcock, Chicago. The feature of this system is a meter located at the subscriber's station which is adapted to be mechanically operated by the switch hook in calling. Provision is made at the exchange for setting the meter by reversing the direction of current flow through the associated line and operating connection between the meter and the switch hook, without interrupting the use of the talking apparatus.

1,186,484. June 6, 1916. PAY STATION TELEPHONE SYSTEM; F. Lubberger, Chicago; assigned to First Trust & Savings Bank, Chicago. In this pay station apparatus for automatic systems, a calling subscriber is prevented from conversing with a called subscriber until after a coin is deposited in the apparatus. Provision is made to allow the calling subscriber to talk with a switchboard operator without paying.

BRACH'S Type 36 Vacuum Lightning Arrester

A model of the most efficient form of lightning protection—the VACUUM ARRESTER. Extremely sensitive to all static currents, giving absolute protection to your lines and equipment.
Use them and watch your maintenance charges drop.

Drop Us a Line for Our Catalog and New Prices

L. S. Brach Supply Co.
129 Sussex Ave. Newark, N. J.

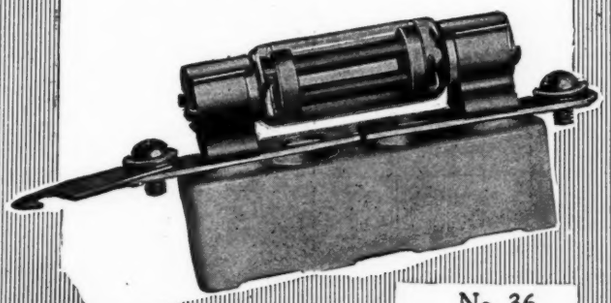

No. 36

Menominee

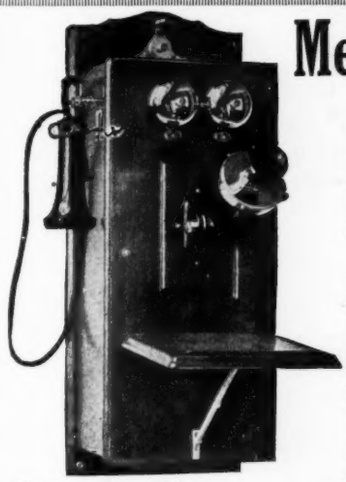

A complete line of telephone and switchboard accessories. Hotel and house annunciators. Induction coils. Telegraph instruments. Medical batteries. Motors, ignition apparatus, etc.

QUALITY
is the keynote of Menominee products. Twenty-three years of experience, complete facilities of production, highest type of engineering ability and unquestioned workmanship and materials has developed Menominee products to their present enviable position.

Compact Type Telephone for Bridging and Series Lines.

Prices are low in point of excellence of materials.

Send for complete catalog and price list before buying.

Magneto

MENOMINEE ELECTRIC MFG. CO.
Menominee, Mich.

SECURITY

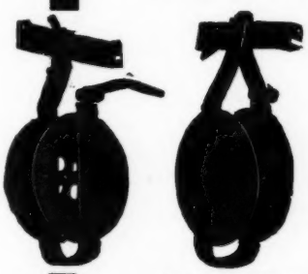

SECURITY CABLE TROLLEYS

The Security is the only Trolley that will take any size Cable and release it. Cannot come loose, unhook or work off the strand. Does not tilt and alignment is perfect. Wheels are malleable iron—wood rollers furnished when desired.

$1.50 and $1.80 Each

SECURITY CABLE CAR

Number One

Pipes forming the frame are continuous, rollers of malleable iron, seat adjustable and made from hard wood with dovetailed ends. Furnished with or without table.

Without Table.....$7.50
With Table 11.50

Write for Bulletin Six

FIRST

SECURITY POTHEAD BRACKET

Take strain off cable, form a permanent and strong installation, and are inexpensive. Made of malleable iron in two sizes and have a maximum cable capacity ranging from 1⅝ inch to 2 inch. Can be shimmed to fit smaller diameters.

55 and 70 Cents Each

TOLEDO, OHIO. TRADE MARK THE F. BISSELL COMPANY

The F. Bissell Company

226-228-230 Huron Street
Toledo, Ohio

TOLEDO, OHIO. TRADE MARK THE F. BISSELL COMPANY

Cook's Protective News

Vol. 1. No. 15 ***In the Interests of Adequate Telephone Protection*** **June 24, 1916**

Baseball and Protection

There was a very interesting game on out at the White Sox Park in Chicago a few days ago.

The score was a tie. There was a runner on 3rd base. Two men had fanned out. What a magnificent opportunity for the next batter!

Everybody in the bleachers and in the grandstand was waiting to see what he would do. A small hit would have won the game. A deep hit would have made it an overwhelming victory. The game was entirely in his hands. It was his first big chance of the season. But he lost it.

He fanned out.

Somehow that little incident reminded us of telephone protectors. They aren't given very many opportunities to show what they can do. But when their chance does come, if they are carefully designed and of honest construction, they will save the game for the telephone manager, just as the ball player could have saved the game for his team.

Badly designed or poorly constructed protective equipment may "fan out" at the wrong time—may "muff" a high tension current, and trouble always results.

In other words, you can't tell how a telephone protector is going to work until the test comes. Then, if the protectors don't work properly, the damage is done.

Better feel safe. Use Cook Protectors. They have stood the test of time. For twenty years they have been standard.

Self-Welding Wire Sleeves

Now is the time to get your orders in for self-welding wire sleeves or joints. They are great time and money savers and when made according to Cook standards, you will find that they make a joint which is absolutely without any equal. The contact is as close as though the metals were welded together, and no moisture can penetrate.

Made in various sizes. Give us an estimate of your probable requirements for the season and we shall be glad to quote you our lowest prices. May we suggest that you get a letter off to us today, giving us this information? The metal market is on the up-grade, and we believe it would be good business for you to anticipate your requirements at present prices.

Cook No. 10 Protector

The Cook No. 10 Protector is one of the standard devices for central office or switchboard protection.

Its many points of improvement place this device entirely in a class by itself. For instance, in resetting a coil which is operated, an automatic test of the protector is made. Thus, should the coil be defective, the operation of resetting automatically indicates this imperfection and the coil simply cannot be re-set.

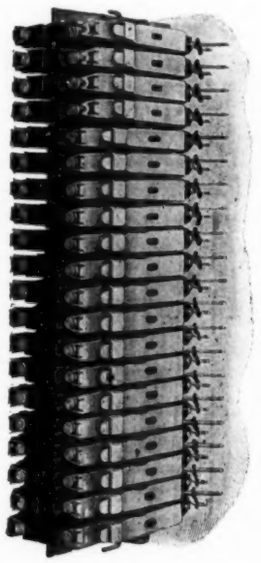

A test would disclose such an imperfection in a coil, but, on account of the press of other work in a telephone exchange, it frequently happens that such testing is not done, and damage may result.

In the Cook No. 10 Protector the re-testing is automatically done.

Needless to state, this central office protector is made of materials which have been proved to insure best satisfaction in this particular line of work. And it is carefully manufactured and assembled.

Furnished in banks of 10 to 20 pairs and arranged to be mounted on Cook Distributing Frames.

If you are in need of central office protection, we recommend the Cook No. 10 for your consideration. Write for complete description and prices.

* * *

School Teacher—"Richard, I'm surprised at you! Don't you know what happens to boys who use bad language when they are playing marbles?"

Richard—"Should think I do! They grow up and become telephone linemen."

Frank B. Cook Co.

326 W. Madison St. **Chicago, U. S. A.**

"Opportunities"

Copy for classified advertising for the current issue should reach us not later than Thursday morning when forms close. Rates for classified advertising five cents a word. Minimum advertisement one dollar. Cash must accompany advertising.

"REBUILT" TELEPHONE APPARATUS

and exchange equipment saves you 30 to 50 per cent without sacrificing quality or efficiency.

SWITCHBOARDS

—Telephones—Apparatus—Protection Equipment—Cable—Everything you need for the installation and operation of a complete exchange—Magneto or Central Energy—of the best and most reputable manufacturers.

NINE YEARS' SUCCESSFUL OPERATION

of our "Rebuilt" Equipment Department puts it past the experimental stage. Quality and price will make you a permanent customer. Better investigate.

Ask for Our Free No. 78 Bargain Bulletin. Address "Rebuilt" Equipment Department

PREMIER ELECTRIC COMPANY Chicago, Ill.

"REBUILT" when connected with PREMIER means something.

Directory Hangers

WE BEG TO DIRECT YOUR ATTENTION to the Universal Wire Loop, an improvement upon the ordinary string loop for hanging up catalogues, directories, telephone books, prices current, etc. Write us for prices and samples. Wire Loop Mfg. Co., 75 Shelby St., Detroit, Mich.

AGENTS WANTED—Practical men wanted to demonstrate quick selling telephone device. Every subscriber wants it. Every telephone company needs it. No experience required to make big money. Write for particulars, stating qualifications. Address 2466 care TELEPHONY.

Help Wanted

WANTED—All around, married troubleman and lineman; magneto plant; 500 stations. Address L. W. Conarroe, Chatsworth, Ill.

HAVING RECENTLY TAKEN OVER several exchanges we need some all-around practical telephone men for Local Managers. Apply by letter, giving full information as to experience, references, salary expected, age, etc. Farmers & Merchants Telephone Company, Hawarden, Iowa.

WANTED—Troubleman on magneto plant 200 phones; in Michigan. State qualifications, references and salary. Address 2479, care TELEPHONY.

For Sale

FOR SALE—Telephone exchange. County seat town. Net income $3,165. Plant rebuilt one year ago. All lines metallic. Twenty-five year franchise. Finest valley in Washington. This will pay you to investigate. Price $10,000; $5,000 cash, balance to suit; $8,000 cash. Address 2448, care TELEPHONY.

FOR SALE—About 700 six ft., 2,600 eight ft., 9,000 ten ft. pine cross-arms, 3¼x4¼ inches, manufactured under specifications Western Electric Co., rejected before treatment by their inspectors for technical reasons. Too fine to throw away or burn—were therefore creosoted 12 lbs. oil per cubic foot and put in stock. They are probably as good as the best, so far as concerns actual use and service. Southern Creosoting Co., Ltd., Slidell, La.

FOR SALE—Telephone system in county seat for sale—90 stations. Situated in one of the healthiest sections of Georgia. Artesian water. Frank Ulmer, Quitman, Ga.

For Sale—Good 8-room home on 11 acres of improved land, together with telephone system of 75 phones, also horses, cattle, vehicles, and farm implements; good town in Sunny South. Address: 2480, care TELEPHONY.

Position Wanted

POSITION WANTED—By first-class repairman. Experienced with line, cable, instrument, switchboards. Address No. 2477, care TELEPHONY.

WANTED POSITION—By wire chief. Experienced with all branches of plant construction and repairs. Address 2474, care TELEPHONY.

POSITION WANTED—By first-class cable and construction man. Seven years' experience. Address W. Hansing, 2603 Bridge Ave., Davenport, Iowa.

POSITION WANTED—Good construction and trouble man wants permanent position. Age 25, sober, good references from different employers. Leslie M. Hammond, Ainsworth, Nebr.

Miscellaneous

If you have a plant to sell or want to buy, write L. R. Watson, Baroda, Mich. Rates reasonable. Nothing too large or too small. Always have prospects in view. L. R. Watson, Baroda, Mich

EXCHANGE WANTED—Telephone exchange of from 300 to 400 telephones. Give full particulars and lowest cash price in first letter. Address J. W. Smith, Box 364, Canistota, South Dakota.

Telephone Supplies

WE ARE JOBBERS. Get our prices on telephones, wires, pins, brackets, poles, cross arms, glass insulators—pole line hardware. Indianapolis Elec. Supply Co., Indianapolis, Ind.

CONSTRUCTION SUPPLIES—Anything you need for your construction work can be ordered from us at prices that can't be beat. Doubleday-Hill Elec. Co., 721 Liberty Ave., Pittsburgh, Pa. Southern Warehouse, 727 12th St., N. W., Washington, D. C.

Repairing

EVEN IF THERE IS SOME PART OF YOUR APPARATUS which is almost worn to a "frazzle," don't ditch it—send it to our repair experts. They'll make it like new. We give the same attention to a small as well as a large order. The Suttle Equipment Co., Olney, Ill.

Insulated Staples
5 Sizes
Pat. Nov., 1900

BLAKE Specialties

STAPLES best for wiring.
TUBE FLUX best Flux for soldering.

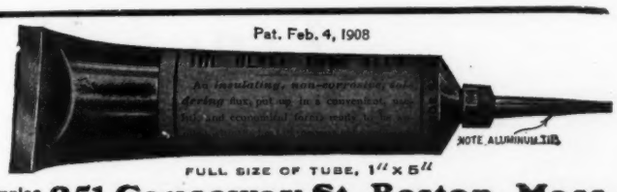

FULL SIZE OF TUBE, 1" x 5"

BLAKE SIGNAL & MFG. CO., Write for Samples 251 Causeway St., Boston, Mass.

Aerial Cable Rings.
D9, E20, M12, N9.

Alligator Wrenches
R9.

Anchors, Guy
C47, E20, F3, G8, M12, W20.

Anchors, Twist
G8, F3, P10.

Appraisers
H2, L4, M2, P14.

Arms and Brackets (for holding telephones)
A13, C38, S37.

Arms, Cross
A10, B10, K6, N19, S18, V20.

Arresters, Lightning (See Protective Devices)

Attorneys, Patent
C30, M2, W22.

Auditing, Accounting
B32, C32.

Auto Trucks
W24.

Automatic Telephones
A22.

Bars, Tamping and Digging
C53, H8, K8, L4.

Batteries, Dry
A13, C18, M5, N17, U4.

Bells, Magneto
A13.

Blank Books, etc.
F18.

Bolts and Nuts
D9, H8, L4, P10.

Bolts (Expansion)
D9, H8, L4, P10.

Bolts (Toggle)
D9, H8, L4, P10.

Bonds, Cable
C51.

Books
F18.

Booths, Telephone
B18, F16, Y2.

Booth Fans
M44.

Boxes, Battery.
E17, P7.

Cable
A15, A16, R9, S23.

Cable Cars
B10.

Cable, Clips (See Clips, Cable)
Cable Hangers (See Hangers Cable)

Cable Racks
C51.

Cable Rollers
C51, L3.

Cable Splicing Joints
M12, S23.

Cable Terminal
C38, R0, S23.

Cableways
R9.

Carbon
M5, N17.

Clamps, Ground (Plates, Cones)
B15, P7.

Clamps, Guy
C38, C47, E20, H8, L4, M12, N9, R0.

Climbers
K8, S18.

Clips, Cable
C38, M12.

Clips, Testing
F11.

Clocks
R17.

Condensers
A13, E9, M7.

Conduit Rods
B10, C51.

Conduit, Underground
N25, F8, W20.

Connectors, Test
C38, F1, R0, S4.

Connectors, Wire
C38, N9, R0.

Guy Clamps (See Clamps, Guy)

Hangers, Cable
B10, C38, E17, E20, M12, N9, R0, S23.

Improved Party Line Systems
A1, A22, S22.

Instruments, Cable (Fault Finding)
L7, M12, S32.

Insulators
E17, P7, U2.

Insulated Copper Wire
R9, S23.

Insurance, Fire and Employers' Liability
U3.

Intercommunicating Systems
A23, K5, S35.

"Buyers" Reference Index

The letter with accompanying number indicates the name of advertiser as given in full in the Alphabetical Index to Advertisers, on the opposite page. *When making known your wants* to any company listed herein, please mention TELEPHONY.

Construction Specialties
B10, C38, C51, C53, E17, H8, K8, M12, O2, R0, S18.

Copper Cables
R9, S23.

Copper Strand
R9, S23.

Cord Adjusters
M12.

Cordage, Telephone
B4, C3, R17, S35.

Counters
V4.

Creosoting
W20.

Cross Arms
N19, S43.

Distributing Racks
C38, R0.

Electrical Instruments
F10, L7, M12, P13, W10.

Engineers, Telephone
C30, H2, J2, L15, M2, Z5. M28, P14, W4.

Fans, Booth
M44.

Fire Alarm Systems
F10.

Flux, Soldering
B4, B7, B13, B15, D18, H6.

Fuses, Mica
C38, R0.

Generators, Ringing
H6, W2.

Gloves
M29.

Gounding Device
P7.

Guy Anchors (See Anchors)

Joints, Cable Splicing (See Cable Splicing Joints)

Lockout Telephones
A1, S22.

Motor Trucks
W24.

Office Fixtures
B18.

Operators' Supervising Sets
A23.

Overhead and Underground Construction Work
C51.

Parts, Special Telephone
A13, A22, A23, C42, G1, K5, S22, S35.

Pins and Brackets
B10, S18.

Pipe Locater
M12.

Platinum
B2, H46, M50.

Pole Changers
W2.

Pole Height Estimator
M12.

Pole Jack
T7.

Pole Line Hardware
B10, H8, K8, L4, N9, O2.

Polerectors
M12.

Poles, Wood
C45, D12, F18, E30, K0, L7, N7, N11, N14, V0, S43, P4.

Powder
D21.

Preservatives, Wood
R2, W20.

Printing.
F18.

Protective Devices
B10, B15, C38, C39, F10, G1, M17, P20, R0.

Rebuilt Telephone Apparatus
M50, P16, R2.

Rope Fitting (Wire)
R9.

Second Hand Equipment
P16.

Semi-Automatic Systems
C38.

Sleeves, Cable
M12, S23.

Sleevings
D18.

Solder, Sticks, Paste, Salts, Liquids, etc.
B4, B7, B13, B15, D18.

Soldering Iron
C38.

Splicing Clamps, Pliers, etc.
B10, C38, M12.

Strand and Cord
R9.

Suspension Bridges
R9.

Supplies, Telephone
C38, G1, K5, K8, M44, S35.

Staples, Insulated
B13, E17, K5, M5.

Switchboard Cable
R17, S35, S23.

Switchboards, Telephone
A13, A19, A22, C38, C42, E14, G1, K5, M24, P16, S22, S35.

Tapes
D18.

Telephones
A13, A19, A22, A23, C38, C42, E14, G1, K5, M44, P16, S22, S35.

Testing Sets
E44, F10, L7, M12, S32.

Timing Devices
C1.

Tools

Torches (Blow)
H6.

Trailers, Truck.
M38.

Trouble Finders
E44, L7, M12, S32.

Trucks
W24.

Underground Specialties
B10, C51.

Wood Preserver
B22, S44.

Wire for all uses, Piano, Aeroplane, Mattress, Broom, Fence, etc.

Wire Aeroplane
R9.

Wire, Copper
A15, A16, R9, S23.

Wire, Copper Clad
S23.

Wire, Enameled
A16, A23, B4, R9.

Wire, Galvanized Iron
A15, A16, I8, R9.

Wire Rope
A16, R9.

Wire Rope Slings
R9.

Wire, Rubber Covered

Wire, Weatherproof
A16, D6, I3, G3, L8, P7, R9, S23.

The L & N Type S Portable Testing Set

Accurate—Rugged—Inexpensive

At no sacrifice of quality or accuracy we are now producing an inexpensive Dial Decade Testing Set. The low price of this set is made possible because of a design which has been carefully worked out to admit of advantageous manufacture of parts in quantities. Further, the design is such that assembling is easily and quickly done. Accuracy and the usual Leeds & Northrup reliability have beenretained. Our guarantee is behind every set.

Price $60

Let us Send you Bulletin No. 530. It describes the set in detail.

The Leeds and Northrup Co. 4901 Stenton Ave., Philadelphia, Pa.

Please tell the Advertiser you saw his Advertisement in TELEPHONY.

Alphabetical Index to Advertisers

The letter and number which precede each name are used in the "Buyers" Reference Index Opposite. The number or numbers following each name denote the page containing advertisement.

A

A 1—Adsit Telephone Lockout Co. 41
A10—American Cross Arm Co. 16
A13—American Electric Co.... 52
A15—American Elec'l Works.. 1
A16—American Steel & Wire Co. 1
A19—Andrea & Sons, Julius... —
A22—Automatic Electric Co.. 12
A23—(Supplies Sales Dept.)... 1
A27—Automatic Transformer Co. ..... —
A30—Auto Reel Co..... —

B

B 2—Baker & Co..... 52
B 0—Barnes & Kobert..... —
B22—Barrett Co., The..... —
B 4—Belden Mfg. Co..... 3
B 7—Benson Co., Alex. R..... 52
B10—Bissell & Co., F..... 45
B13—Blake Signal & Mfg. Co. 47
B32—Bowdle, F. A..... 52
B15—Brach Supply Co., L. S.. 45
B18—Brownell, C. H..... 16

C

C 1—Calculagraph Co..... —
C18—Champion Carbon Mfg. Co. 3
C30—Clement, E. E..... 41
C32—Coffey System & Audit Co. 14
'38—Cook Co., Frank B..... 46
C39—Cox Arrester Co..... —
C42—Cracraft-Leich Elec. Co... 2
C45—Crawford Cedar Co..... 14
C47—Crouse-Hinds Co..... —
C49—Connor, A. P..... 52
C51—Cope, T. J..... —
C53—Columbus Handle & Tool Co. ..... —

D ....

D 6—Detroit Ins. Wire Co.... 52
D 9—Diamond Expansion Bolt Co. 7
D12—Duluth Log Co..... 14
D18—Dunton Co., M. W..... 1
D21—Du Pont de Nemours Powder Co..... —

E

E 9—Electric Specialty Co.... 52
E44—Electric Specialty Mfg. Co. ..... —
E14—Ericsson Mfg. Co..... 43
E17—Eureka Supply Co..... —
E20—Everstick Anchor Co.... 1
E30—Everts, G. W., Lumber Co. 14

F

F 3—Faultless Anchor Co..... —
F 8—Fibre Conduit Co..... 41
F18—Finch Bros. 14
F10—Foote, Pierson & Co..... 2
F11—Frankel Connector Co... 49
'16—French Cabinet Co..... —
F18—Ft. Wayne Ptg. Co..... 1

G

G 1—Garford Mfg. Co.....10-11
G 3—Gottschalk Mfg. Co., J. W. 52
G 8—Gund Mfg. Co..... —

H

H 2—Harrison, J. A..... 52
H 6—Holtzer-Cabot ..... —
H 8—Hubbard & Co..... —

I

I 3—Indiana Rubber & Ins. Wire Co. 1
I-8—Indiana Steel & Wire Co.. 51
I10—Insulator Arrester Co.... —

J

J 2—Jackson, D. C. & Wm. B. 41

K

K 0—Kaye & Carter Lbr. Co.. —
K 5—Kellogg Switchboard & Supply Co.....8-9
K 8—Klein & Sons, Mathias... 52

L

L 3—Lafayette Engineering Co. 15
L15—Land, Edmund 14
L 4—Lanz & Sons, M..... —
L 7—Leeds & Northrup Co.... 48
L10—Lindsley Bros. Co..... 14

M

M 2—McMeen & Miller..... 52
M 5—Manhattan Elec'l Supply
M 7—Mansbridge, G. F..... 49
M 7—Mansbridge, G. F..... —
M12—Matthews & Bros., W. N. —
M44—Menominee Elec. & Mfg. Co. 45
M38—Miami Trailer Co., The.. 41
M46—Miller Smelting & Refining Co. 41
M17—Minnesota Electric Co... 1
M24—Monarch Telo. Mfg. Co.. 6
M27—Moore, Alfred ..... —
M29—Morrison-Ricker ..... —
M50—Mutual Smelting & Refining Co. 14

N

N18—National Electric Specialty Co..... 41
N25—National Fire Proofing Co. ..... —
N 7—National Pole Co..... 1
N 9—National Telephone Supply Co..... 16
N11—Naugle Pole & Tie Co.. 14
N 0—Northern Coast Timber Co. 14
N14—Northern Mercantile Co. 14
N17—Nungesser Carbon & Battery Co. ..... —
N19—National Tank & Pipe Co. 14
N22—National White Cedar Association 13

O

O 2—Oshkosh Mfg. Co..... —

P

P10—Parker Supply..... —
P 4—Page & Hill Co..... —
P 7—Paragon Electric Co..... 16
P12—Partridge Lumber Co.... 14
P13—Pignolet, L. M..... 58
P14—Polk, W. C..... 52
P16—Premier Electric Co..... 47
P20—Protective Electrical Supply Co..... —

R

R 1—Rebuilt Telo. Equip. Co.. 51
R 2—Reeves Co. 15
R 0—Reliable Elec. Co..... —
R 9—Roebling's Sons Co., J. A. 51
R17—Runzel-Lenz Elec. Mfg. Co. 3

S

S18—Smith & Hemenway Co.. 49
S20—Sparta Mfg. Co..... —
22—S.-R. Electric Co..... —
S23—Standard Underground Cable Co..... —
S43—Southern Exchange Co... 14
S44—Southern Wood Preserver Co. ..... —
S27—Sterling Sons Co., W. C.. 14
S32—Stewart Brothers ..... —
S35—Stromberg-Carlson Telo. Mfg. Co. 4-5
S39—Suttle Equipment Co.... —
S37—Swedish - American Telo. Co. 49

T

T15—Telephony 50
T 7—Templeton Kenly Co..... —
T 5—Torrey Cedar Co..... 14
T20—Toledo Battery Co..... 7
T14—Townson-Remington Electric Co..... —

U

U 4—United Battery Corp..... —
U 2—Universal Specialty Co... 52
U 3—Utilities Indemnity Exchange Co..... —

V

V 0—Valentine Clark Co..... 14
V 4—Veeder Mfg. Co..... —

W

W 2—Warner Electric Co..... —
W22—Webster, H. C..... 1
W10—Weston Elect'l Instr. Co. 16
W20—Wyckoff Pipe & Creosoting Co. 52
W24—White Co..... —

Y

Y 2—Yesbera Mfg. Co..... 41

Z

Z 5—Zahm, Chas. ..... —

"Red Devil" Bonded Linemen's Tools
could not possibly mean anything but economy for you. Investigate.
SMITH & HEMENWAY CO., Inc., 87 Chambers St., NEW YORK CITY

Every Lineman Likes To Use

FRANKEL'S Testing Clips

Frankel Testing Clip will make a perfect connection in 10 seconds—(one-tenth the time required to skin a wire) —without injury to wire or insulation.

Prices:

No. 2521—
Less than 12 ..... 20c
12 lots 12½c
100 lots 11c
500 lots 10c
Net F. O. B. New York, from your supply house.

MAKERS OF THE BEST ONLY
FRANKEL
CONNECTOR CO., INC. N.Y.

733 Broadway, New York City.
or Western Electric Co. ALL BRANCHES

Let the Scientists worry about amperage, voltage, resistance, etc.; what you want is reliability, service, economy. Get it by using

Red Seal Dry Batteries

absolutely guaranteed—you to be the sole judge.

Manhattan Electrical Supply Company

Chicago, New York, St. Louis, Frisco
Factories: Jersey City, N. J.
Ravenna, Ohio

No Extra Charge for Spring Clips

F. W. STRANG W. T. PROSSER

STRANG & PROSSER
ADVERTISING AGENCY
EMPIRE BUILDING
SEATTLE

June 14, 1916.

Mr. J.R.Hastie,
Telephony Publishing Co.,
Chicago.

Dear Sir:

You are entitled to many apologies for our failure to explain why the suspension of the St. Paul & Tacoma Lumber Company contract, but we have had hard work connecting with Mr. Winslow, of that company, following his instructions to us. First, he was a way on a vacation, and then went to San Francisco on a hurry call.

The St. Paul creosoting plant was loaded to the guards with orders from the Telephony advertising--so much so that it was necessary to refuse business--and then came a fire that seriously interfered with operations and deliveries.

So Mr. Winslow asked for a suspension of advertising awaiting a catch-up and we hope he will release copy before very long.

You will be interested in knowing that this client sold more than $100,000 worth of creosoted piling on the first month's advertising in Telephony, costing slightly more than $100.

With best wishes,

Strang & Prosser.

ROEBLING
Telegraph and Telephone Wire
Heavily Double Galvanized

Roebling Telegraph and Telephone Wire, because of its heavy coat of spelter and of the extra quality of material used in its manufacture, withstands the hardest service and demonstrates its superiority over the average line wire.

It's a wire highly in favor with buyer and lineman. Made up in ½ mile coils—uncoiling easily—it's the wire for increased efficiency and economy in service.

Highest electrical properties.

A good wire to have in stock.

John A. Roebling's Sons Company, Trenton, N. J.

BRANCHES:

New York, Boston, Chicago, Philadelphia, Pittsburgh, Cleveland, Atlanta, San Francisco, Los Angeles, Seattle, Portland, Ore.

OUR EXTRA HEAVY DOUBLE GALVANIZED WIRE INSURES

HIGHEST EFFICIENCY.
LONGEST LIFE.
LOWEST COST OF UPKEEP.

It's easy to determine, TEST IT.

As wire will test best, so also will it last best and give better satisfaction while it lasts.

We guarantee our wire to conform with all standard specifications as well as to be satisfactory to the purchaser.

IT'S THE ONE BEST PROVEN BY TEST.—*TRY IT.*

Handled by most representation jobbers and supply houses.

Write for samples, test and compare.

INDIANA STEEL & WIRE COMPANY
MUNCIE INDIANA U. S. A.

REBUILT BARGAINS

International 4-bar 1600 ohm bridging compacts	$ 5.60
Dean Electric Company 3-bar 1000 ohm bridging common battery type magneto wall sets	4.85
Vote-Berger 3-bar 1000 or 1600 ohm bridging common battery type magneto wall sets	4.70
Williams-Abbott 3-bar 1000 ohm bridging compacts	4.50
Kellogg No. 186 common battery (desk) straight line wood hotel sets	4.00
Kellogg No. 39 common battery desk sets complete with No. 75 straight line steel signal set	6.00
North Electric Company 3-bar 1000 ohm bridging compacts	4.75
Monarch No. 22 type 3-bar 1000 ohm bridging desk sets	6.30
Monarch No. 22 type 4-bar 1600 ohm bridging desk sets	7.25
Dean Electric Company No. 2315 direct current common battery Bull neck desk sets, straight line, $5.00; Harmonic with either 16-33-50 or 66 style ringer	5.75
Stromberg-Carlson No. 681 type common battery desk sets complete with 659 steel signal set, straight line, $5.00; Harmonic with either 33-50 or cycle ringer	5.50
Baird 4-bar Midget type compact cabinets	.65
New hand generator cabinets, 3-4 or 5 bar size	.35
Stromberg-Carlson No. 14A common battery induction coils	.30
Kellogg golden finish, 100-line capacity magneto switchboard fully equipped with 90 No. 3-A 100 ohm series and 10 No. 3-C 1000 ohm bridging self-restoring combined line drops and jacks, and the following operators' equipment: 10 pairs of plugs and cords, 10 listening and double ringer keys, 10 single supervision ring off drops, power and hand generator switch key, hand generator, operator's suspended type transmitter head band receiver and complete night equipment; also 13 feet of full capacity line cable from base of board	170.00

For complete list of Standard Apparatus refer to our Rebuilt Bargain Bulletin No. 6 (free on request). Stock received since Bulletin published shown in our Telephony ads.

REBUILT TELEPHONE EQUIPMENT CO.
2127-2129 W. 21st St. - Chicago, Ill.

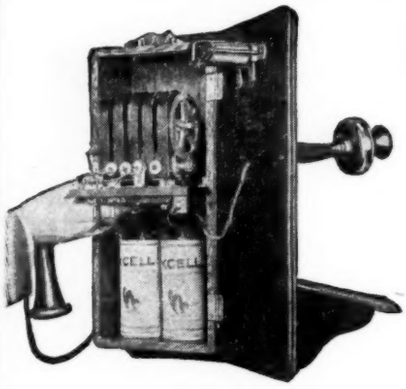

Battery-Saver Push Buttons

are installed, when so ordered, in all **American Electric** magneto wall telephones at no extra charge. Just another reason for selecting **American Electric** standardized telephone apparatus.

Write us today about your proposed purchases in telephones or switchboards and let us show you why other live buyers are selecting our equipment.

American Electric
COMPANY
Oldest Independent Telephone Factory in the Field
STATE AND 64th STS CHICAGO

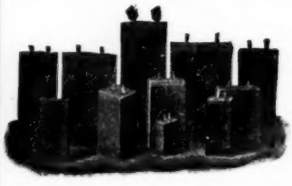

"MANSBRIDGE" TYPE, TELEPHONE CONDENSERS
embody all the essentials of long life and good service.
Write for Literature
ELECTRIC SPECIALTY CO.
Cresco, Iowa

TOOLS
for all classes of electrical construction and repair work. Write for catalog.
Mathias Klein & Sons Canal Station 34 Chicago

JOHN A. HARRISON
TRAFFIC ENGINEER
OPERATING
Instructions
Methods
and
Costs
Switchboard Requirements
LIMA, OHIO

W. C. POLK
CONSULTING TELEPHONE ENGINEER
Plans, Estimates and Reports Appraisal and Supervision
617 Commerce Building
KANSAS CITY, MO.

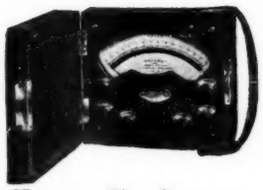

Every Exchange Needs One
of our portable instruments because besides measuring volts and amperes, it will determine resistance of coils, lines, etc., and locate trouble in the simple ways described in our booklet on testing. Write for the booklet—it's free, and complete catalog of testing and switchboard meters.
L. M. Pignolet
80 Cortlandt St. New York
Medal Panama-Pacific International Exposition

DETROIT RUBBER COVERED WIRES
Reg. U. S. Patent Office
Telephone Wires a Specialty
DETROIT Insulated WIRE COMPANY
DETROIT Michigan

McMEEN and MILLER
(Incorporated)
Samuel G. McMeen
Kempster B. Miller
Leigh S. Keith
Telephone Engineers
1454 Monadnock Block
CHICAGO

PLATINUM
Wire, Sheet, Rivets and Contacts
Send for Literature
Baker & Co., Inc., Newark, N. J.
N. Y. Office: 30 Church St.

Telephone Cords Insulated Wires
Alfred F. Moore
Philadelphia, Pa.
Cleveland 423 High St. S. E.
Chicago 1368-70 Grand Ave.

POLES **CREOSOTED** CROSS ARMS
Our conduit after 30 years still in service—no concrete—no breakage.
ALL KINDS OF CREOSOTED MATERIALS
Send for Catalogue E
WYCKOFF PIPE & CREOSOTING CO., Inc.
30 E. 42nd St., N. Y. Works: Portsmouth, Va.
NEVER DECAY

Representation Before All Governmental Departments, Bureaus Commissions
A. P. CONNOR
Consulting Electrical and Mechanical Engineer
(Ex-Chief Electrical Engineer For New York)
Attorney at Law and Solicitor of
PATENTS AND TRADE MARKS
121 CARROLL STREET S. E. WASHINGTON, D. C.
Electrical and Intricate Technical Patents A Specialty

When you solder—use
YAGER'S FLUXES
paste, salts, stick, liquid
Ask for free sample
ALEX. R. BENSON CO. Hudson, N. Y.